MZ-N420D

SERVICE MANUAL

Ver 1.0 2004.04

US Model
Canadian Model
E Model

US and foreign patents licensed from Dolby Laboratories.

- SonicStage, OpenMG and the OpenMG logo, MagicGate, Memory Stick and the MagicGate Memory Stick logo, Memory Stick and the Memory Stick logo, Net MD and the Net MD logo are trademarks of Sony Corporation.
- Microsoft, Windows, Windows NT and Windows Media are trademarks or registered trademarks of Microsoft Corporation in the United States and /or other countries.
- IBM and PC/AT are registered trademarks of International Business Machines Corporation.
- Macintosh is a trademark of Apple Computer, Inc. in the United States and/ or other countries.
- MMX and Pentium are trademarks or registered trademarks of Intel Corporation.
- All other trademarks and registered trademarks are trademarks or registered trademarks of their respective holders.
- ™ and ® marks are omitted in this manual.

Model Name Using Similar Mechanism	MZ-NE410
Mechanism Type	MT-MZN710-177
Optical Pick-up Name	LCX-5R

SPECIFICATIONS

Audio playing system
MiniDisc digital audio system
Laser diode properties
Material: GaAlAs
Wavelength: λ = 790 nm
Emission duration: continuous
Laser output: less than 44.6 µW
(This output is the value measured at a distance of 200 mm from the objective lens surface on the optical pick-up block with 7 mm aperture.)
Recording and playback time (when using MDW-80)
Maximum 160 min. in monaural
Maximum 320 min. in LP4 stereo
Revolutions
Approx. 380 rpm to 2,700 rpm
Error correction
ACIRC (Advanced Cross Interleave Reed Solomon Code)
Sampling frequency
44.1 kHz
Coding
ATRAC (Adaptive TRansform Acoustic Coding)
ATRAC3 — LP2/LP4

– Continued on next page –

PORTABLE MINIDISC PLAYER

9-877-707-01 **Sony Corporation**
2004D1678-1 **Personal Audio Company**
© 2004.04
Published by Sony Engineering Corporation

SONY®

Downloaded from www.Manualslib.com manuals search engine

Modulation system
EFM (Eight to Fourteen Modulation)
Number of channels
2 stereo channels
1 monaural channel
Frequency response
20 to 20,000 Hz ± 3 dB
Outputs
🎧: stereo mini-jack, maximum output level
5 mW + 5 mW, load impedance 24 Ω (US)
5 mW + 5 mW, load impedance 16 Ω (EXCEPT US)

General

Power requirements
One LR6 (size AA) alkaline battery (not supplied)
Recommended temperature for check-in/check-out
+5 °C (+41° F) or higher
Dimensions
Left - hand model
Approx. 81 × 28.9 × 74.4 mm (w/h/d) ($3^{1}/_{4}$ × $1^{3}/_{16}$ × 3 in.) without projections.
Right - hand model
Approx. 81 × 30.7 × 74.4 mm (w/h/d) ($3^{1}/_{4}$ × $1^{1}/_{4}$ × 3 in.) without projections.
Mass
Left - hand model
Approx. 106 g (3.8 oz) the player only
Right - hand model
Approx. 113.3 g (4.0 oz) the player only

Design and specifications are subject to change without notice.

Supplied accessories

Headphones/earphones (1)
Dedicated USB cable (1)
CD-ROM (SonicStage Ver. 2.0 and MD Simple Burner Ver. 2.0) (1)*
Recordable disc (US and Canadian models only) (1)

* Do not play a CD-ROM on an audio CD player.

Battery life [1)]

When	SP Stereo	LP2 Stereo	LP4 Stereo
playing[2)]	Approx. 42 hours	Approx. 48 hours	Approx. 56 hours
transferring out audio data from the computer[3)]	75 tracks (of about 5 minutes each)	300 tracks (of about 5 minutes each)	600 tracks (of about 5 minutes each)

1) When using a new Sony LR6 (size AA) "STAMINA" alkaline dry battery (produced in Japan).
2) Measured in accordance with the JEITA (Japan Electronics and Information Technology Industries Association) standard.
3) The numbers of tracks that can be checked out differs according to the computer's operating environment.

SAFETY-RELATED COMPONENT WARNING!!

COMPONENTS IDENTIFIED BY MARK ⚠ OR DOTTED LINE WITH MARK ⚠ ON THE SCHEMATIC DIAGRAMS AND IN THE PARTS LIST ARE CRITICAL TO SAFE OPERATION. REPLACE THESE COMPONENTS WITH SONY PARTS WHOSE PART NUMBERS APPEAR AS SHOWN IN THIS MANUAL OR IN SUPPLEMENTS PUBLISHED BY SONY.

ATTENTION AU COMPOSANT AYANT RAPPORT À LA SÉCURITÉ!

LES COMPOSANTS IDENTIFÉS PAR UNE MARQUE ⚠ SUR LES DIAGRAMMES SCHÉMATIQUES ET LA LISTE DES PIÈCES SONT CRITIQUES POUR LA SÉCURITÉ DE FONCTIONNEMENT. NE REMPLACER CES COMPOSANTS QUE PAR DES PIÈSES SONY DONT LES NUMÉROS SONT DONNÉS DANS CE MANUEL OU DANS LES SUPPÉMENTS PUBLIÉS PAR SONY.

Downloaded from www.Manualslib.com manuals search engine

CAUTION
Use of controls or adjustments or performance of procedures other than those specified herein may result in hazardous radiation exposure.

Notes on chip component replacement

- Never reuse a disconnected chip component.
- Notice that the minus side of a tantalum capacitor may be damaged by heat.

Flexible Circuit Board Repairing

- Keep the temperature of the soldering iron around 270 ˚C during repairing.
- Do not touch the soldering iron on the same conductor of the circuit board (within 3 times).
- Be careful not to apply force on the conductor when soldering or unsoldering.

UNLEADED SOLDER

Boards requiring use of unleaded solder are printed with the lead-free mark (LF) indicating the solder contains no lead.
(Caution: Some printed circuit boards may not come printed with the lead free mark due to their particular size)

: LEAD FREE MARK

Unleaded solder has the following characteristics.

- Unleaded solder melts at a temperature about 40 ˚C higher than ordinary solder.
  Ordinary soldering irons can be used but the iron tip has to be applied to the solder joint for a slightly longer time.
  Soldering irons using a temperature regulator should be set to about 350 ˚C .
  Caution: The printed pattern (copper foil) may peel away if the heated tip is applied for too long, so be careful!
- Strong viscosity
  Unleaded solder is more viscous (sticky, less prone to flow) than ordinary solder so use caution not to let solder bridges occur such as on IC pins, etc.
- Usable with ordinary solder
  It is best to use only unleaded solder but unleaded solder may also be added to ordinary solder.

TABLE OF CONTENTS

1. SERVICING NOTES 4

2. GENERAL 5

3. DISASSEMBLY
3-1. Case (Lower) 7
3-2. Upper Panel Section 7
3-3. LCD Module, Button (Control) 8
3-4. MAIN Board 8
3-5. Mechanism Deck (MT-MZN710-177) 9
3-6. Set Chassis Assy 9
3-7. OP Service Assy (LCX-5R) 10
3-8. Holder Assy 11
3-9. DC Motor (Sled) (M602) 11
3-10. DC Motor (Over Write Head Up/Down) (M603), DC SSM18B Motor (Spindle) (M601) 12

4. TEST MODE 13

5. ELECTRICAL ADJUSTMENTS 18

6. DIAGRAMS
6-1. Block Diagram 38
6-2. Printed Wiring Board - MAIN Board (Side A) 39
6-3. Printed Wiring Board - MAIN Board (Side B) 40
6-4. Schematic Diagram - MAIN Board (1/4) 41
6-5. Schematic Diagram - MAIN Board (2/4) 42
6-6. Schematic Diagram - MAIN Board (3/4) 43
6-7. Schematic Diagram - MAIN Board (4/4) 44

7. EXPLODED VIEWS
7-1. Case Section 55
7-2. Chassis Section 56
7-3. MAIN Board Section 57
7-4. Mechanism Deck Section-1 (MT-MZN710-177) 58
7-5. Mechanism Deck Section-2 (MT-MZN710-177) 59

8. ELECTRICAL PARTS LIST 60

Downloaded from www.Manualslib.com manuals search engine

SECTION 1
SERVICING NOTES

NOTES ON HANDLING THE OPTICAL PICK-UP BLOCK OR BASE UNIT

The laser diode in the optical pick-up block may suffer electrostatic break-down because of the potential difference generated by the charged electrostatic load, etc. on clothing and the human body.
During repair, pay attention to electrostatic break-down and also use the procedure in the printed matter which is included in the repair parts.
The flexible board is easily damaged and should be handled with care.

NOTES ON LASER DIODE EMISSION CHECK

Never look into the laser diode emission from right above when checking it for adjustment. It is feared that you will lose your sight.

NOTES ON HANDLING THE OPTICAL PICK-UP BLOCK (LCX-5R)

The laser diode in the optical pick-up block may suffer electrostatic break-down easily. When handling it, perform soldering bridge to the laser-tap on the flexible board. Also perform measures against electrostatic break-down sufficiently before the operation. The flexible board is easily damaged and should be handled with care.

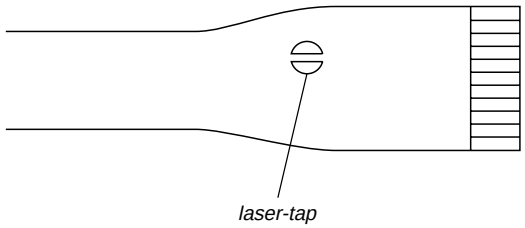

OPTICAL PICK-UP FLEXIBLE BOARD

- In performing the repair with the power supplied to the set, removing the MAIN board causes the set to be disabled.
  In such a case, make a solder bridge to short SL802 (OPEN/CLOSE) on the MAIN board in advance.

- MAIN board (Side B) -

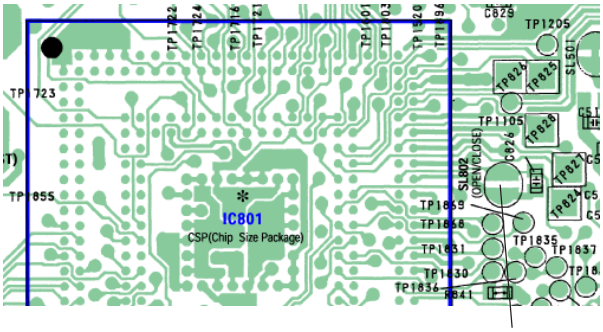

SL802 (OPEN/CLOSE)

Providing the required system environment

System requirements

The following system environment is required in order to use the SonicStage Ver.2.0/MD Simple Burner Ver.2.0 software for the MD Walkman.

Computer	IBM PC/AT or Compatible
	• CPU: Pentium II 400 MHz or higher (Pentium III 450 MHz or higher is recommended.) • Hard disk drive space: 200 MB or more (1.5 GB or more is recommended) (The amount space will vary according to Windows version and the number of music files stored on the hard disk.) • RAM: 64 MB or more (128 MB or more is recommended)
	Others • CD drive (capable of digital playback by WDM) • Sound Board • USB port (supports USB (previously USB 1.1))
Operating System	Factory installed: Windows XP Media Center Edition 2004/Windows XP Media Center Edition/Windows XP Professional/Windows XP Home Edition/ Windows 2000 Professional/Windows Millennium Edition/Windows 98 Second Edition
Display	High Color (16bit) or higher, 800 × 600 dots or better (1024 × 768 dots or better is recommended)
Others	• Internet access: for Web registration, EMD services and CDDB • Windows Media Player (version 7.0 or higher) installed for playing WMA files

This software is not supported by the following environments:

OSs other than the indicated above
Personally constructed PCs or operating systems
An environment that is an upgrade of the original manufacturer-installed operating system
Multi-boot environment
Multi-monitor environment
Macintosh

Notes

We do not ensure trouble-free operation on all computers that satisfy the system requirements.
The NTFS format of Windows XP/Windows 2000 Professional can be used only with the standard (factory) settings.
We do not ensure trouble-free operation of the system suspend, sleep, or hibernation function on all computers.
For Windows 2000 Professional users, install Service Pack 3 or later version before using the software.

Handle the FLEXIBLE board (over write head) with care, as it has been soldered directly to the MAIN board.
In repairing the component side of MAIN board, connect the FLEXIBLE board (over write head) and the MAIN board with the lead wires in advance.

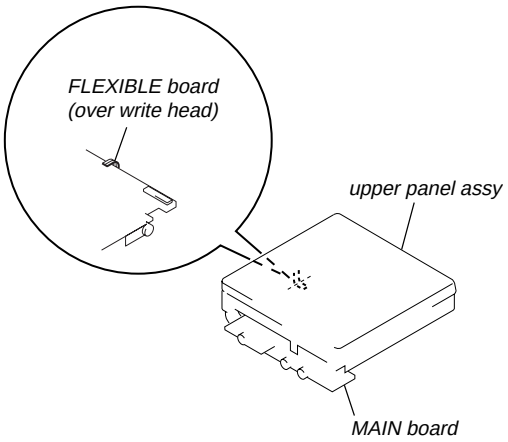

- This set requires the patch data in the nonvolatile memory (IC852) to be rewritten using the application, when the MAIN board was replaced. (See page 28)

Downloaded from www.Manualslib.com manuals search engine

SECTION 2
GENERAL

This section is extracted from instruction manual.

This model comes in two designs with different shapes and names for the buttons.

Front of the player

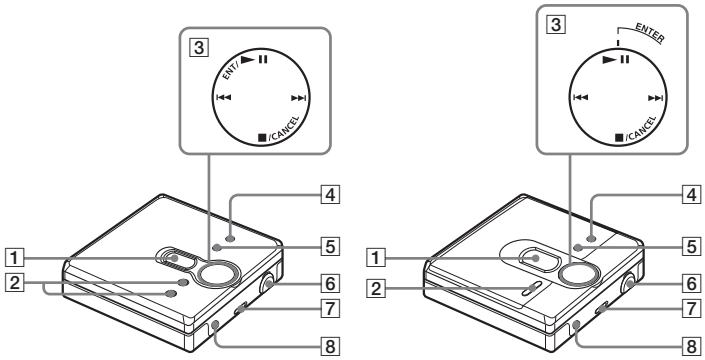

On the following pages of this manual, explanations are given using the illustration in the top-left of this page.

1 Display window
2 VOL (VOLUME) +* and – button
  * The VOL (VOLUME) + button has a tactile dot.
3 4-position control key
  ENT/►II (ENTER/►II) (enter/play/pause)*
  ⏮ and ⏭ (search/AMS)
  ■/CANCEL (stop/cancel)
  * The ENT/►II (ENTER/►II)button has a tactile dot.
4 MENU button
5 GROUP button
6 USB jack
  When connecting to your computer, connect the dedicated USB cable to this jack.
7 HOLD switch
8 🎧 (headphones/earphones) jack

Back of the player

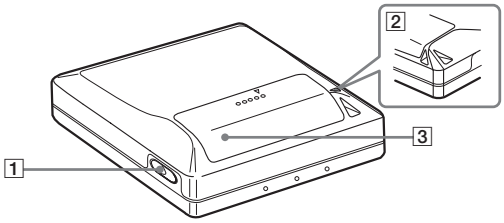

1 OPEN button
2 Hand strap hole
  Use the hole to attach your own strap.
3 Battery compartment lid

The display window of the player

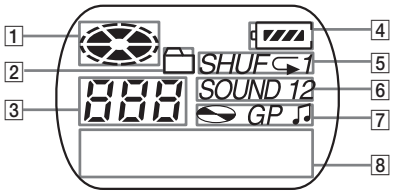

1 Disc indication
2 Group mode indication
  Lights up when group mode is on.
3 Track number display
4 Battery level indication
  Shows approximate battery condition.
5 Play mode indication
  Shows play mode of the MD.
6 SOUND indication
7 Disc, group, track indication
8 Character information display
  Displays the track names, elapsed time, etc.

Downloaded from www.Manualslib.com manuals search engine

SECTION 3
DISASSEMBLY

• This set can be disassembled in the order shown below.

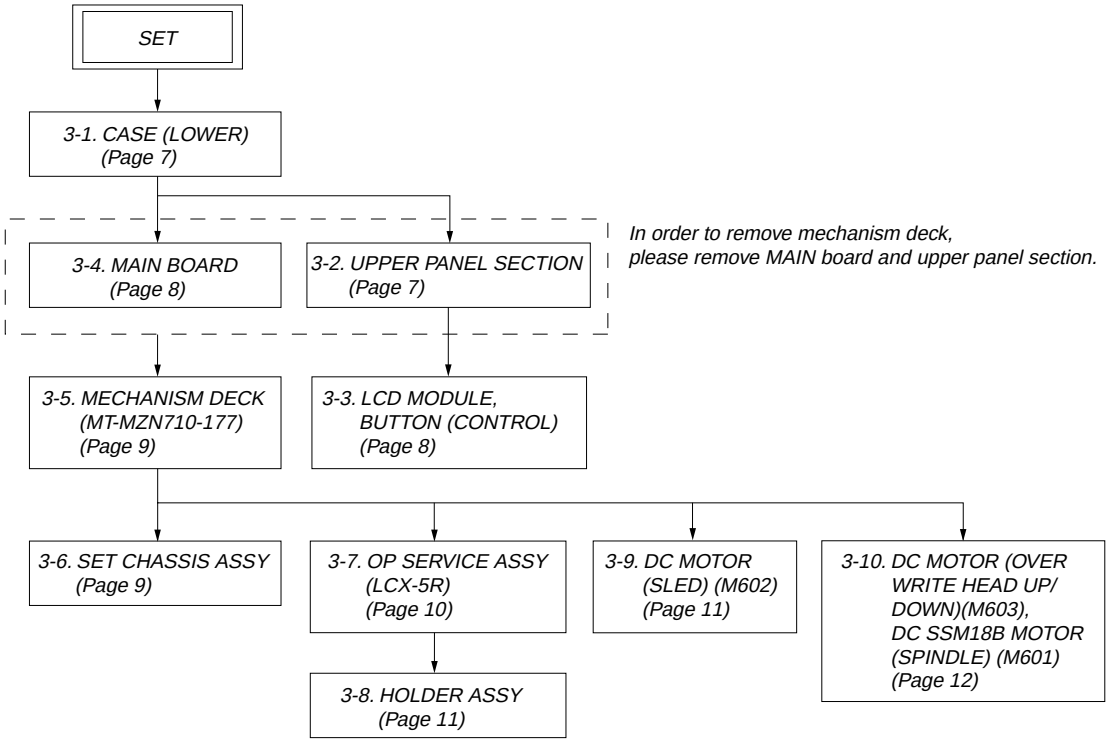

Downloaded from www.Manualslib.com manuals search engine

Note: Follow the disassembly procedure in the numerical order given.

3-1. CASE (LOWER)

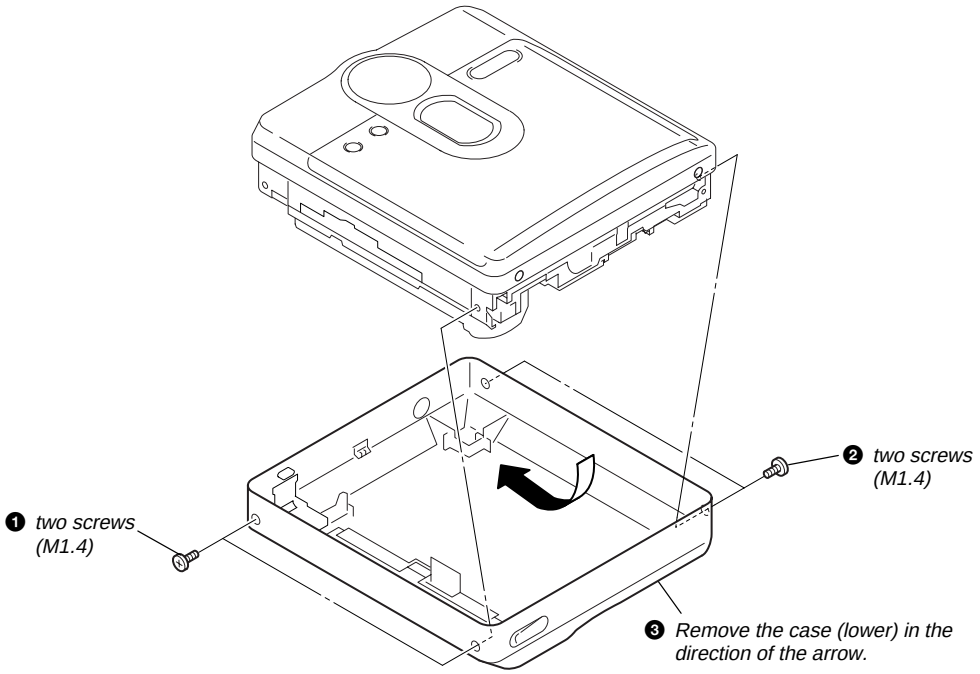

3-2. UPPER PANEL SECTION

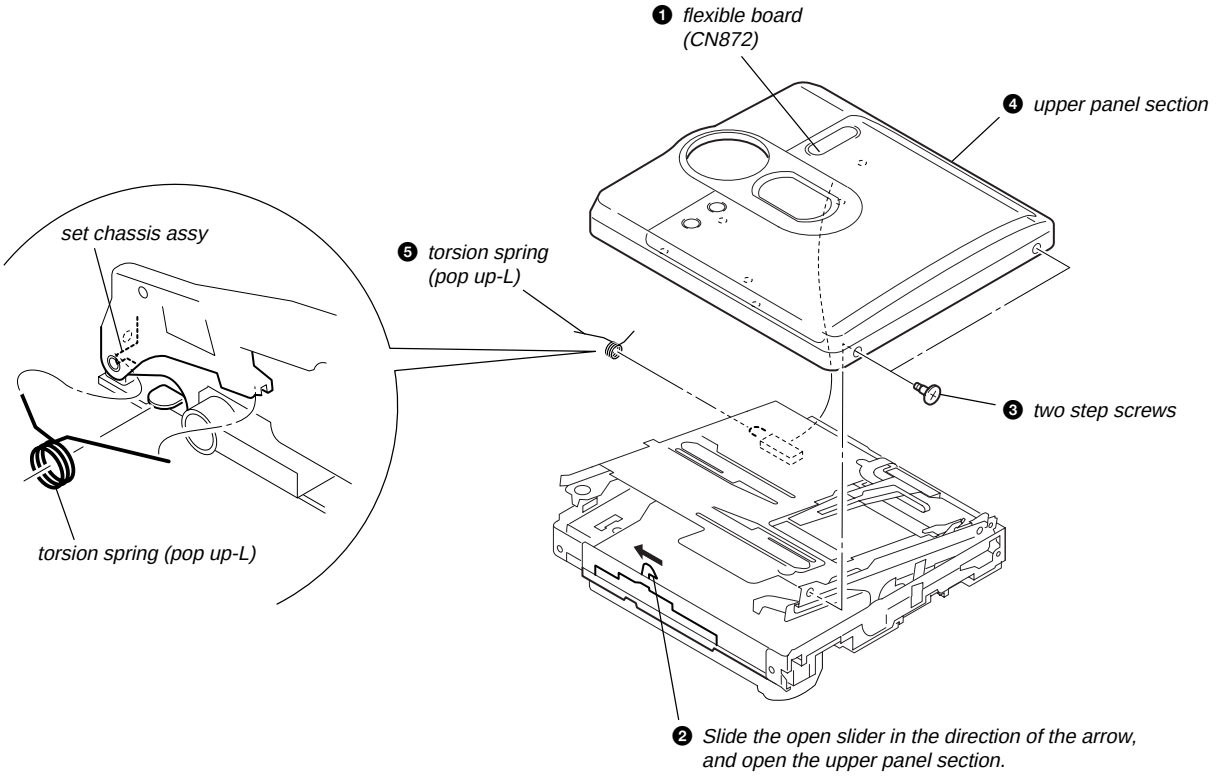

Downloaded from www.Manualslib.com manuals search engine

3-3. LCD MODULE, BUTTON (CONTROL)

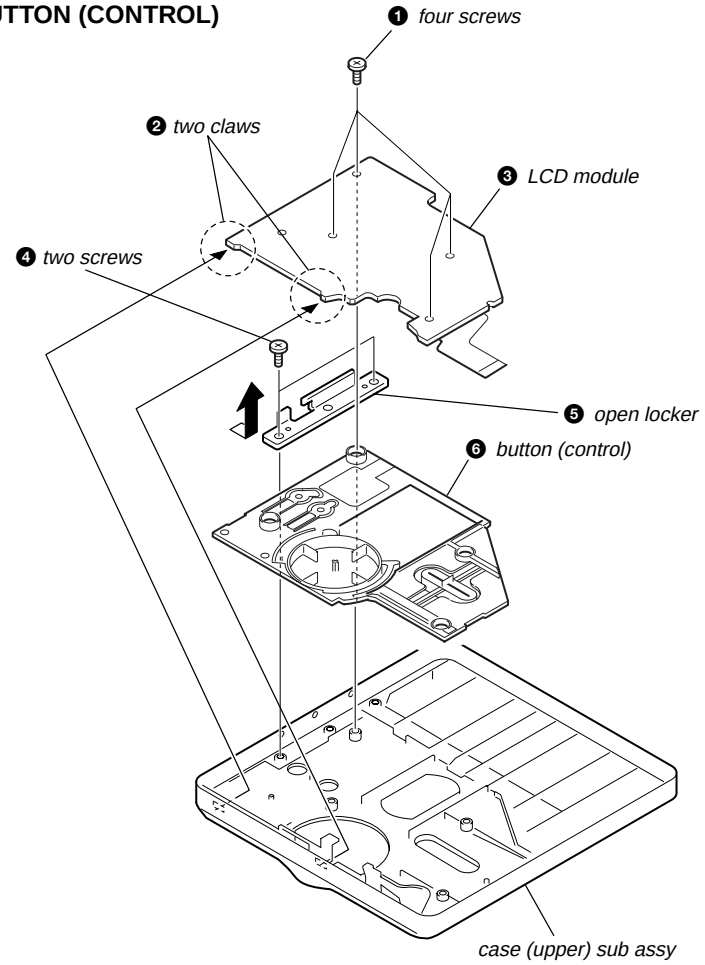

3-4. MAIN BOARD

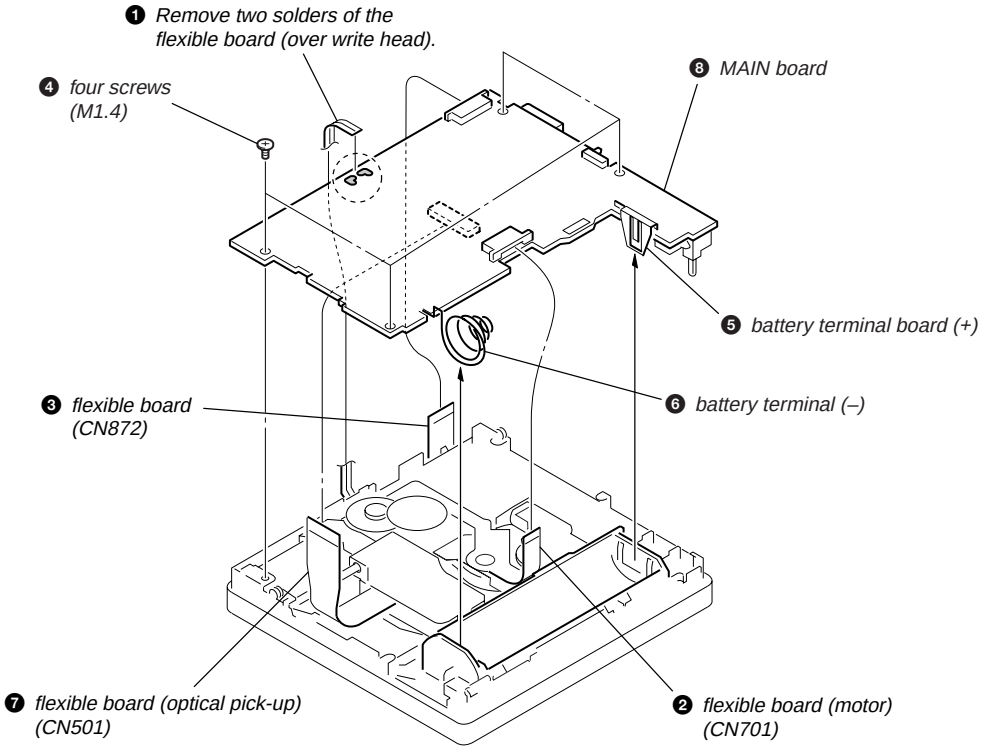

Downloaded from www.Manualslib.com manuals search engine

3-5. MECHANISM DECK (MT-MZN710-177)

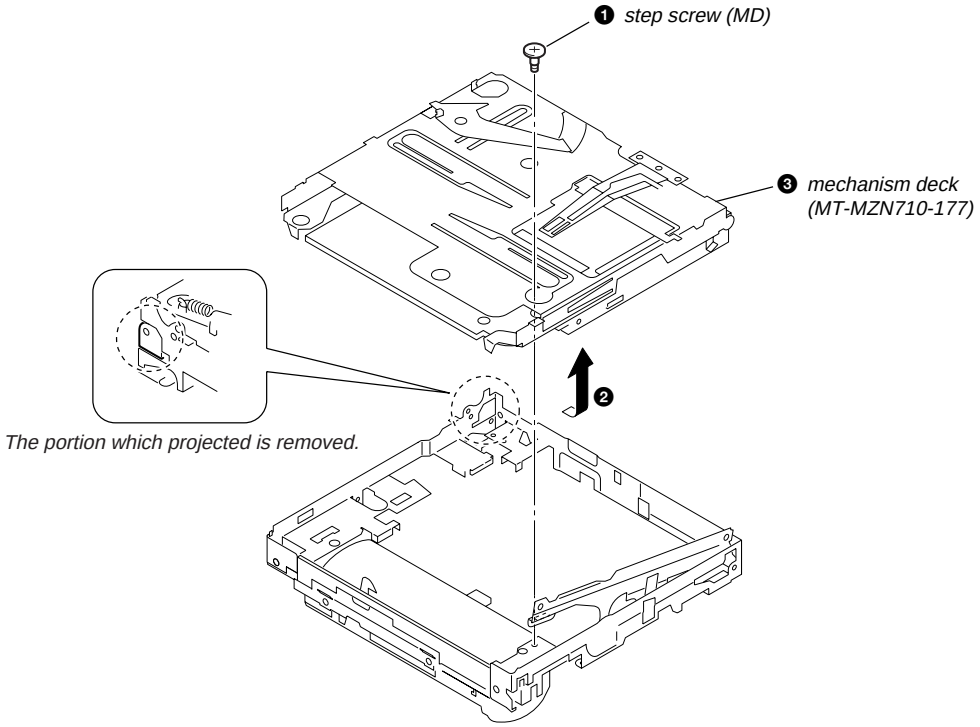

3-6. SET CHASSIS ASSY

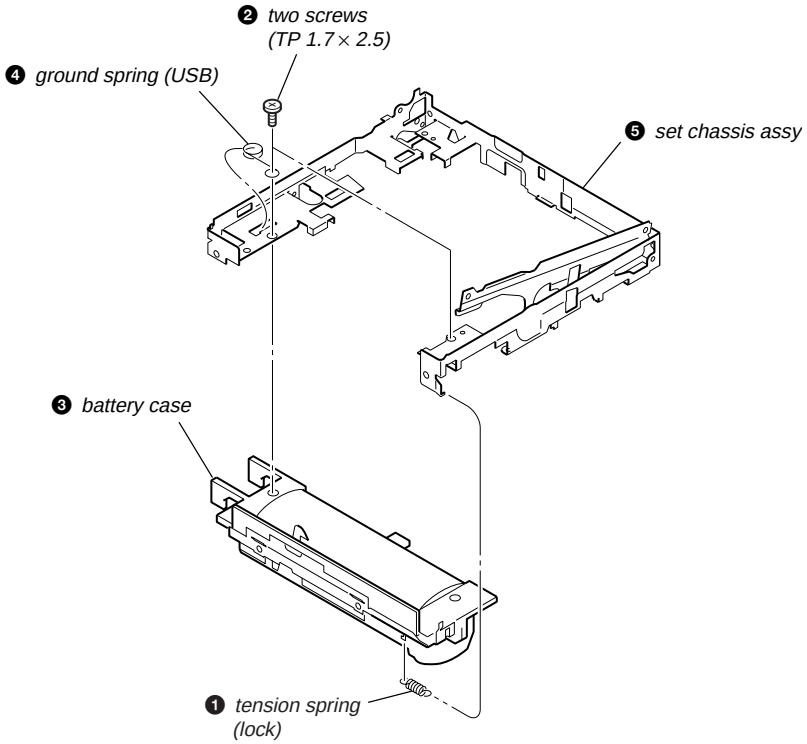

Downloaded from www.Manualslib.com manuals search engine

3-7. OP SERVICE ASSY (LCX-5R)

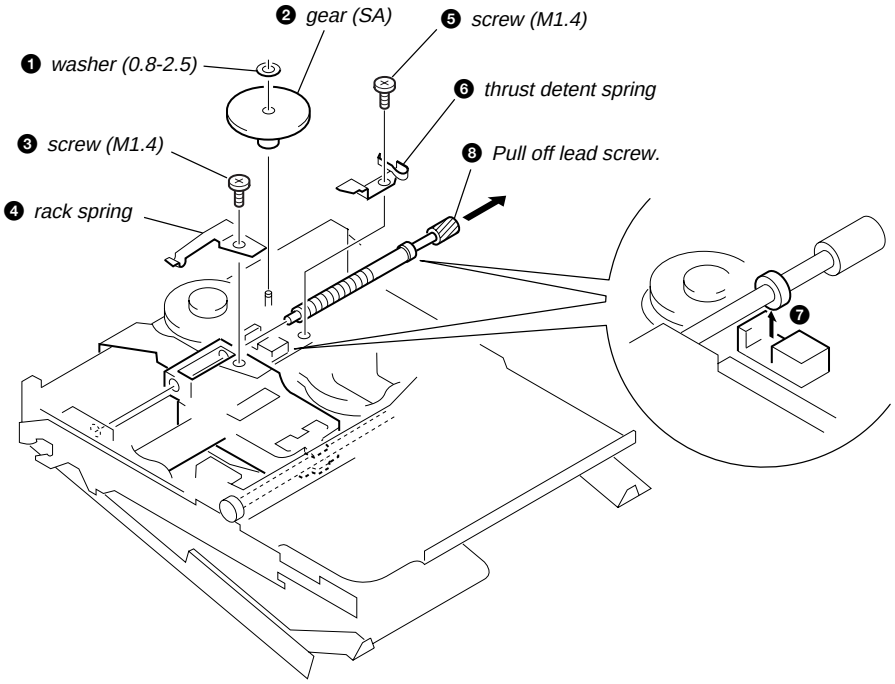

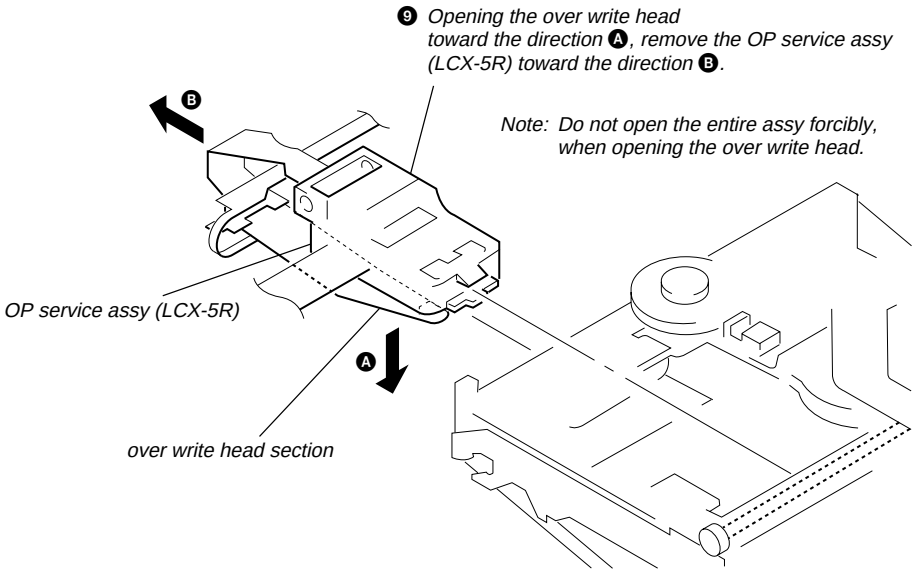

Downloaded from www.Manualslib.com manuals search engine

3-8. HOLDER ASSY

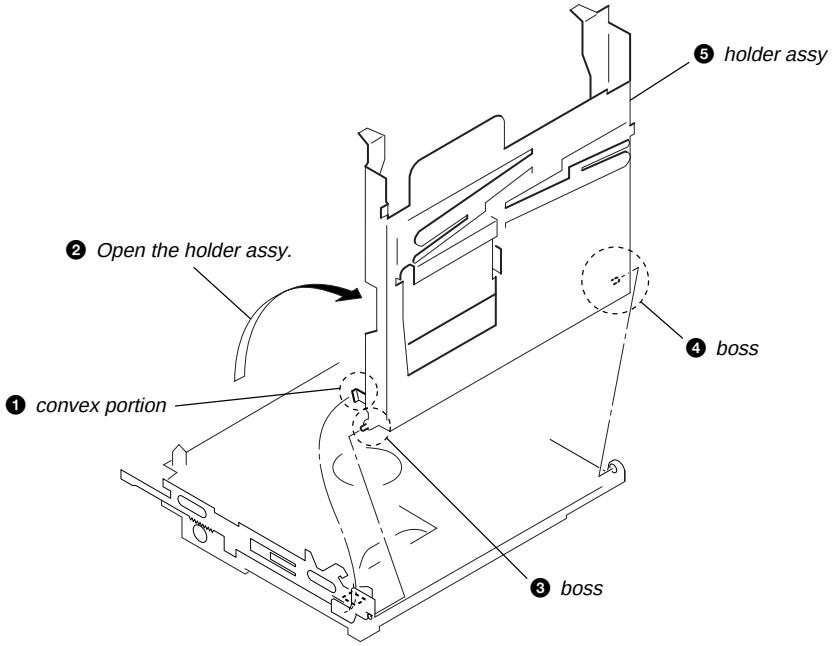

3-9. DC MOTOR (SLED) (M602)

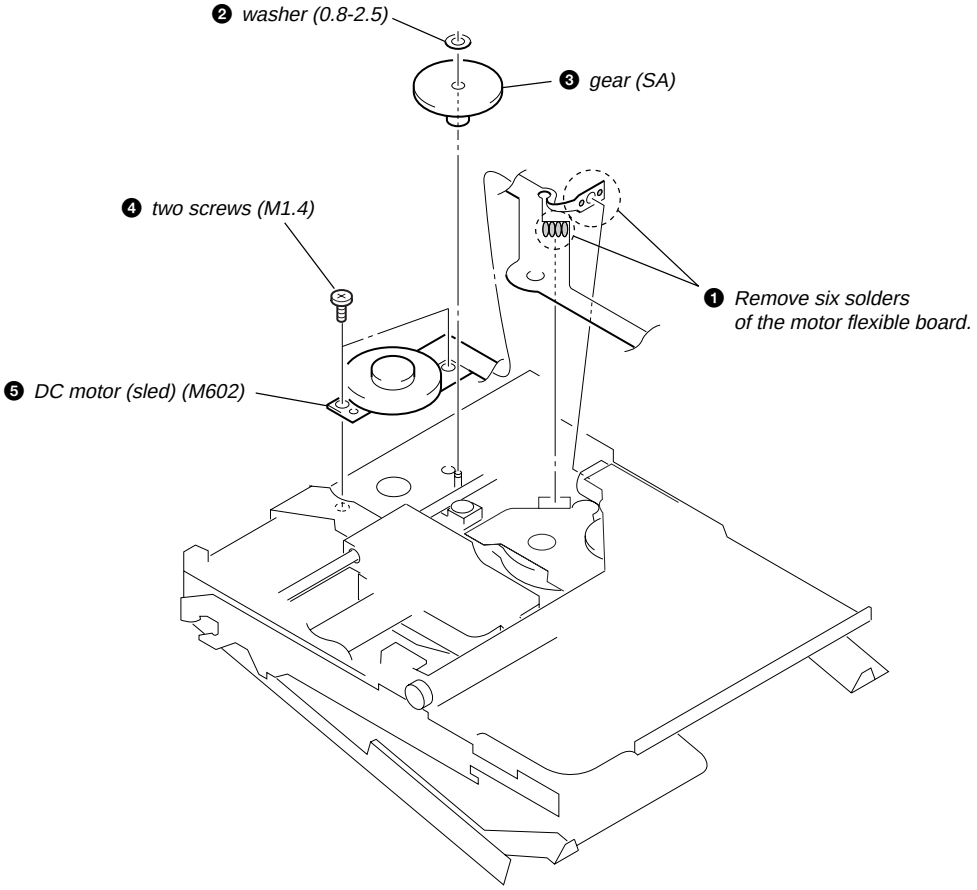

Downloaded from www.Manualslib.com manuals search engine

3-10. DC MOTOR (OVER WRITE HEAD UP/DOWN)(M603), DC SSM18B MOTOR (SPINDLE) (M601)

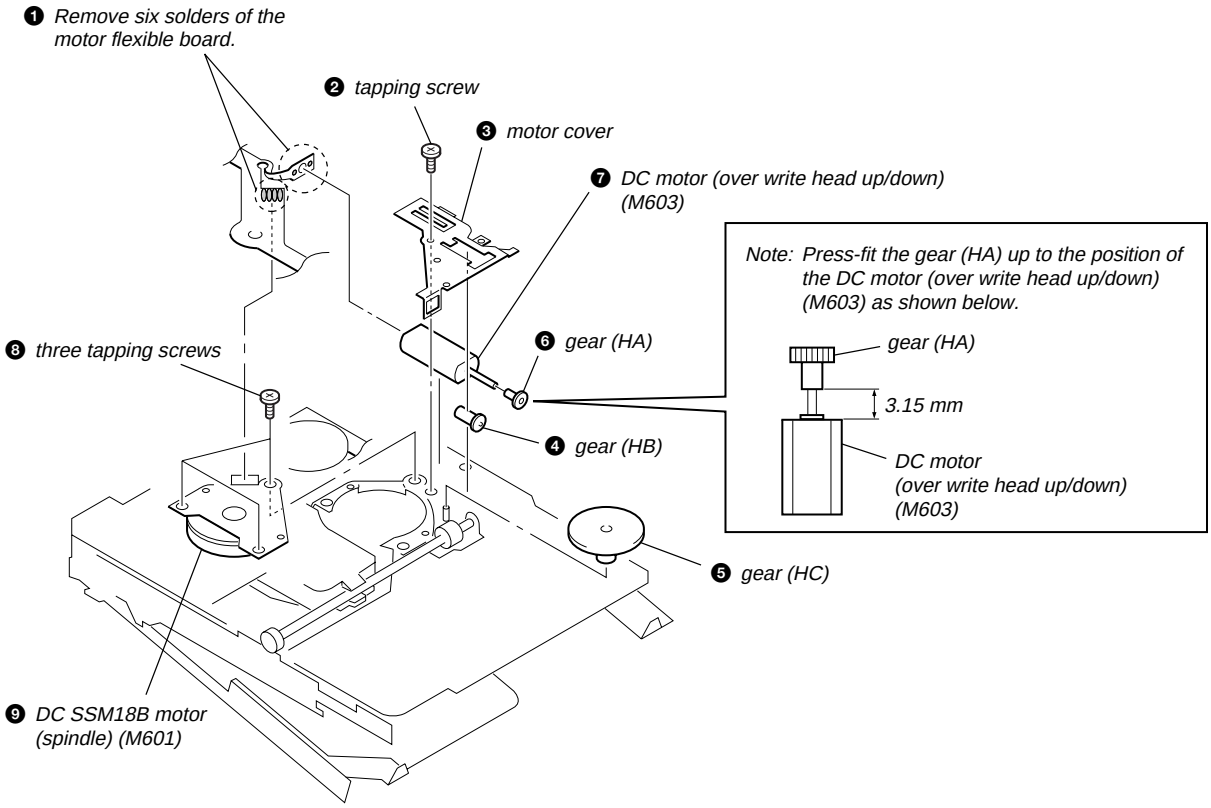

Downloaded from www.Manualslib.com manuals search engine

SECTION 4
TEST MODE

Outline

- This set provides the Overall adjustment mode that allows CD and MO discs to be automatically adjusted when in the test mode. In this overall adjustment mode, the disc is discriminated between CD and MO, and each adjustment is automatically executed in order. If a fault is found, the system displays its location. Also, the manual mode allows each individual adjustment to be automatically adjusted.
- Operation in the test mode is performed with the set.

Setting Method of Test Mode

There are two different methods to set the test mode:

① Short SL803 (TEST) on the MAIN board with a solder bridge (connect pin ⑫⑨ of IC801 to the ground). Then, turn on the power.

– MAIN Board (Side B) –

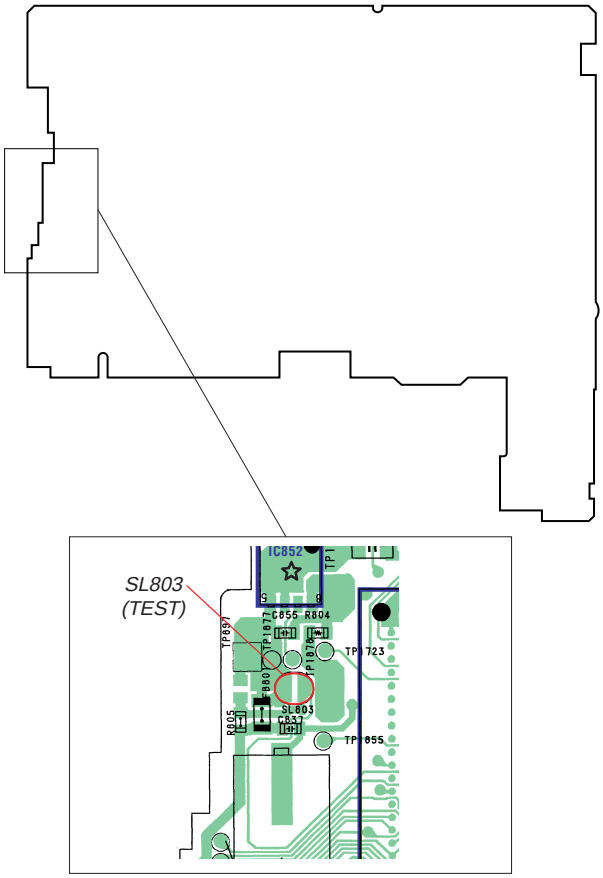

② In the normal mode, turn on the HOLD switch. While pressing the ENTER/►II key press the following order:
VOLUME + → VOLUME + → VOLUME – → VOLUME – → VOLUME + → VOLUME – → VOLUME + → VOLUME – → GROUP → GROUP

Note: If electrical adjustment (CD and MO overall adjustment) has not been finished completely, "ERROR" is displayed on LCD of the set.

Operation in Setting the Test Mode

- When the test mode becomes active, first the display check mode is selected.
- Other mode can be selected from the display check mode.
- When the test mode is set, the LCD repeats the following display.

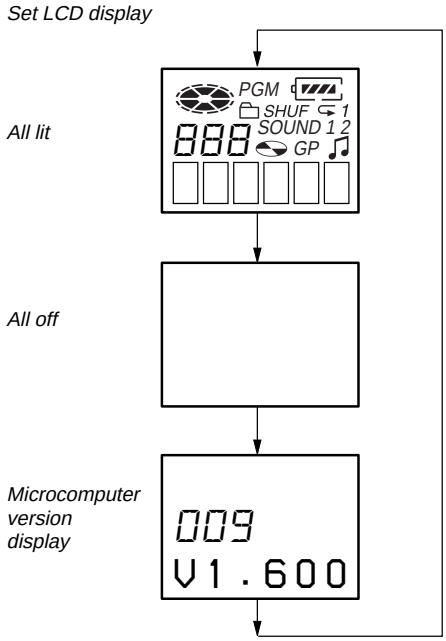

- When the ENTER/►II key is pressed and hold down, the display at that time is held so that display can be checked.

Releasing the Test Mode

For test mode set with the method ①:
Turn off the power and open the solder bridge on SL803 (TEST) on the MAIN board.

Note: Remove the solders completely. Remaining could be shorted with the chassis, etc.

For test mode set with the method ②:
Turn off the power.

Downloaded from www.Manualslib.com manuals search engine

Configuration of Test Mode

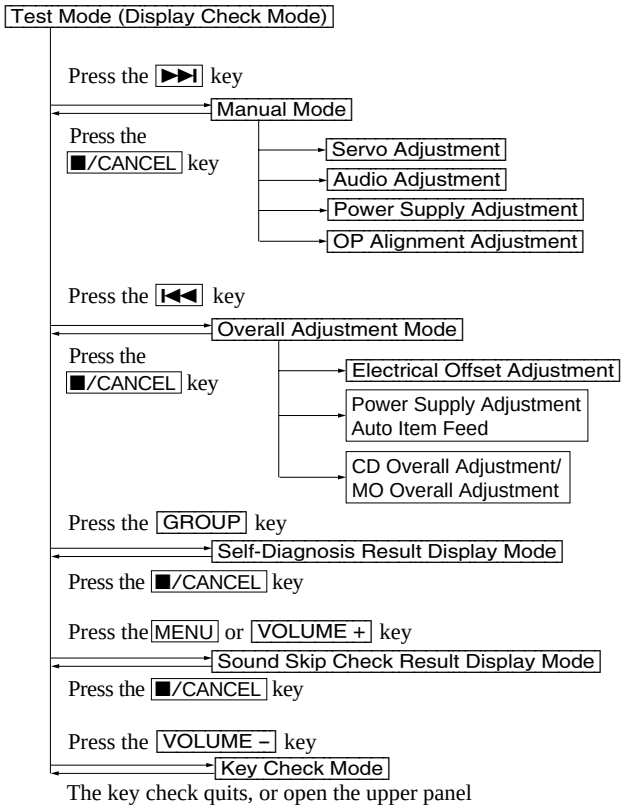

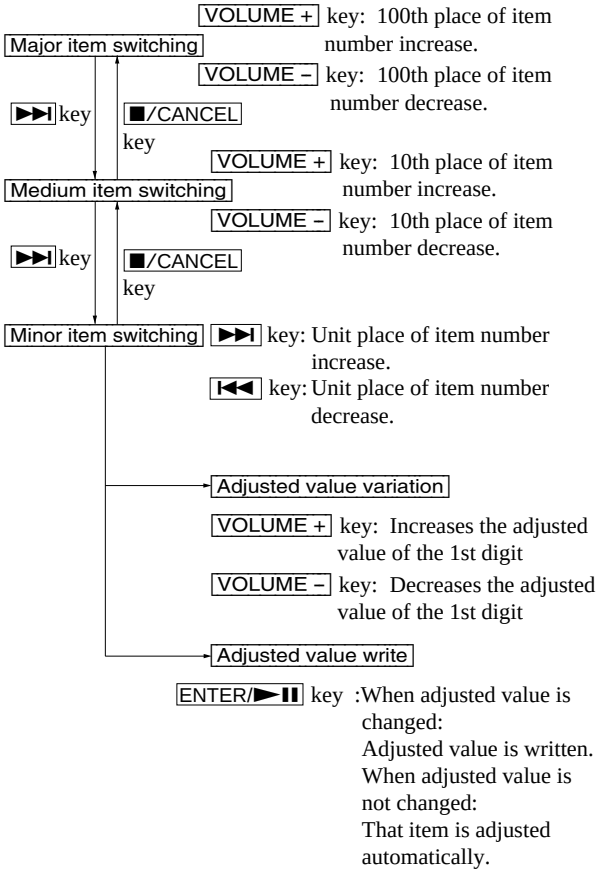

Manual Mode

Mode to adjust or check the operation of the set by function. Normally, the adjustment in this mode is not executed. However, the Manual mode is used to clear the memory, power supply adjustment, and laser power check before performing automatic adjustments in the Overall Adjustment mode.

• Transition Method in Manual Mode

1. Set the test mode (see page 13).
2. Press the ▶▶I to activate the manual mode where the LCD display as shown below.

Set LCD display

3. During each test, the optical pick-up moves outward or inward while the ▶▶I or I◀◀ key is pressed for several seconds respectively.
4. Each test item is assigned with a 3-digit item number; 100th place is a major item, 10th place is a medium item, and unit place is a minor item.
   The values adjusted in the test mode are written to the non-volatile memory (for the items where adjustment was made).

Downloaded from www.Manualslib.com manuals search engine

5. The display changes a shown below each time the MENU key is pressed.

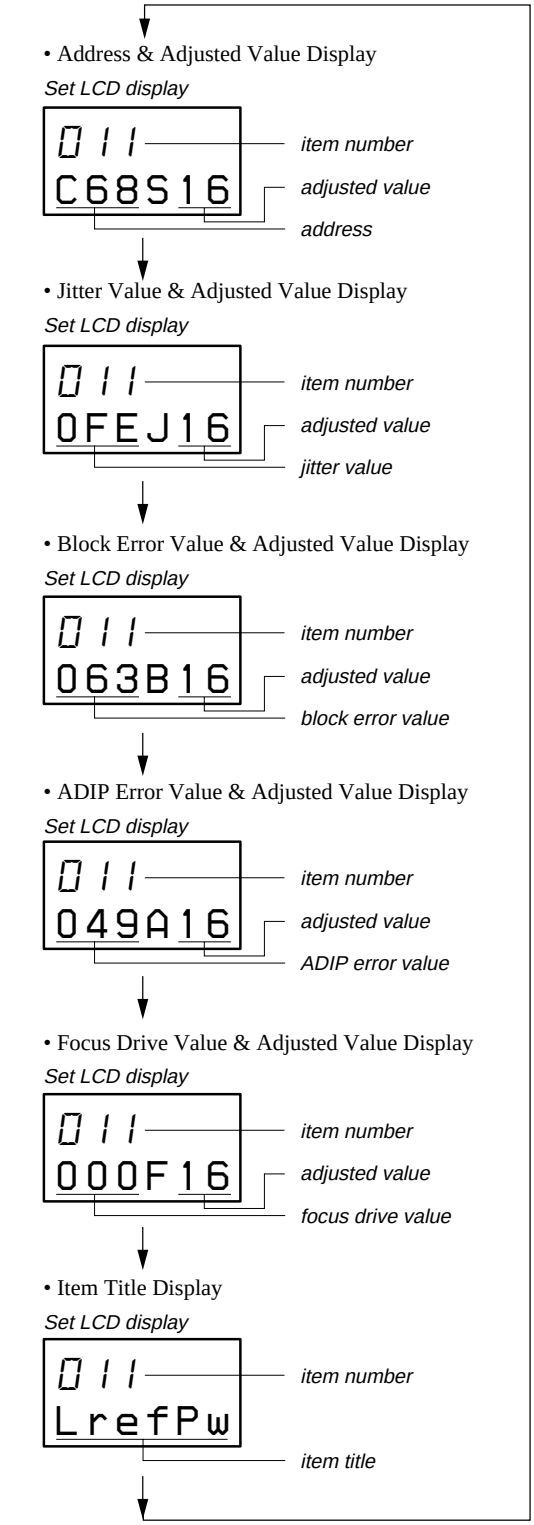

However in the power mode (item number 700's), only the item is displayed.

6. Quit the manual mode, and press the ■/CANCEL key to return to the test mode (display check mode).

Overall Adjustment Mode

Mode to adjust the servo automatically in all items.
Normally, automatic adjustment is executed in this mode at the repair.
For further information, refer to "SECTION 5 ELECTRICAL ADJUSTMENTS" (see page 18).

Self-Diagnosis Result Display Mode

This set uses the self-diagnostic function system in which if an error occurred during the recording or playing, the mechanism control block and the power supply control block in the microcomputer detect it and record its cause as history in the nonvolatile memory.
By checking this history in the test mode, you can analyze a fault and determine its location.
Total recording time is recorded as a guideline of how long the optical pick-up has been used, and by comparing it with the total recording time at the time when an error occurred in the self-diagnosis result display mode, you can determine when the error occurred.
Clear both self-diagnosis history data and total recording time, if the optical pick-up was replaced.

• Self-Diagnosis Result Display Mode Setting Method

1. Set the test mode (see page 13).
2. In the display check mode, press the GROUP key activates the self-diagnosis result display mode where the LCD display as shown below.

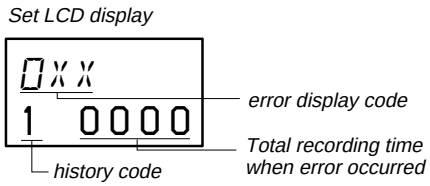

3. Then, each time the ▶▶I key is pressed, LCD display descends by one as shown below. Also, the LCD display ascends by one when the I◀◀ key is pressed.

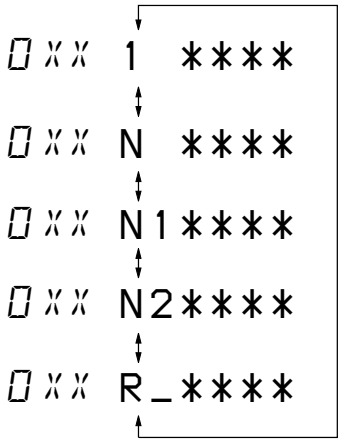

xx : Error code
**** : Total recording time

If the GROUP key is pressed with this display, the LCD switches to the simple display mode.

4. Quit the self-diagnosis result display mode, and press the ■/CANCEL key to return to the test mode (display check mode).

Downloaded from www.Manualslib.com manuals search engine

• Description of Error Indication Codes

Problem	Indication code	Meaning of code	Simple display	Description
No error	00	No error	---	No error
Servo system error	01	Illegal access target address was specified	Adrs	Attempt to access an abnormal address
	02	High temperature	Temp	High temperature detected
	03	Focus error	Fcus	Disordered focus or can not read an address
	04	Spindle error	Spdl	Abnormal rotation of disc
TOC error	11	TOC error	TOC	Faulty TOC contents
	12	Data reading error	Data	Data could not be read at SYNC
	13	TOC address error	Tadr	TOC address data error
Power supply system error	22	Low battery	LBat	Momentary interruption detected
Offset system error	31	Offset error	Ofst	Offset error
	32	Focus error ABCD offset error	ABCD	Focus error ABCD offset error
	33	Tracking error Offset error	TE	Tracking error Offset error
	34	X1 tracking error Offset error	X1TE	X1 tracking error Offset error
	35	MD DATA 2 disc error	MD2	MD DATA 2 disc error
	36	Mirror error	Mirr	Mirror retry over

• Description of Indication History

History code number	Description
1	The first error
N	The last error
N1	One error before the last.
N2	Two errors before the last.
R_	Total recording time

Reset the Error Display Code

After servicing, reset the error display code.

• Setting Method of Reset the Error Display Code

1. Set the test mode (see page 13).
2. Press the GROUP key activates the self-diagnosis result display mode.
3. To reset the error display code, press the ENTER/►II key (twice) when the code is displayed (except "R_✱✱✱✱").
   (All the data on the 1, N, N1, and N2 will be reset)

Downloaded from www.Manualslib.com manuals search engine

Sound Skip Check Result Display Mode

This set can display the count of errors that occurred during the recording/playing for checking.

• Setting Method of Sound Skip Check Result Display Mode

1. Set the test mode (see page 13).
2. Press the MENU key or VOLUME + key, and the playing or recording sound skip result display mode becomes active respectively where the LCD displays the following.

Set LCD display

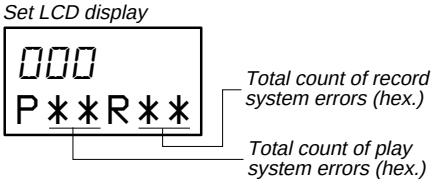

3. When the MENU key is pressed, total error count is displayed on the LCD, and each time the ▶▶I key is pressed, the display item moves down by one as shown below. Also, if the I◀◀ key is pressed, the display item moves up by one, then if the VOLUME + key is pressed, the display in the record mode appears.
   When the VOLUME + key is pressed, total error count is displayed on the LCD, and each time the ▶▶I key is pressed, the display item moves down by one as shown below. Also, if the I◀◀ key is pressed, the display item moves up by one, then if the MENU key is pressed, the display in the play mode appears.

Playing sound skip result display

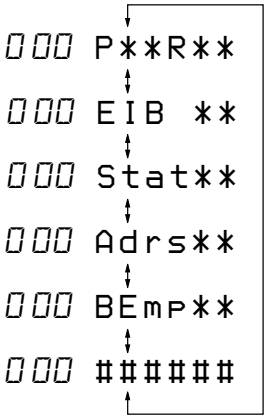

Recording sound skip result display

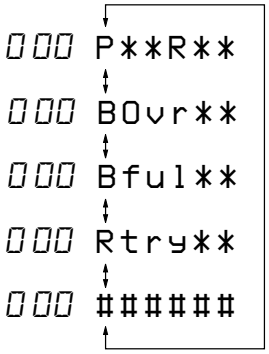

P**R** *: Total play/record errors (hex.)*
** *: Counter of sound skip check each item (hex.)*
: 6-digit address where sound was skipped last (hex.)

• Cause of Sound Skip Error

	Cause of error	Description of error
Play	EIB	Sound error correction error
	Stat	Decoder status error
	Adrs	Address access error
	BEmp	Buffer is empty
Record	BOvr	Buffer is full, and sounds were dumped
	Bful	Buffer capacity becomes less, and forcible writing occurred
	Rtry	Retry times over

4. To quit the sound skip check result display mode and to return to the test mode (display check mode), press the ■/CANCEL key.

• Setting Method of Key Check Mode

1. Set the test mode (see page 13).
2. Press the VOLUME – key activates the key check mode.

Set LCD display

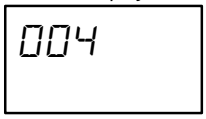

3. When each key on the set is pressed, its name is displayed on the set LCD. (Operated position is displayed for 4 seconds after the slide switch is operated.

Example1: When the ▶▶I key on the set is pressed:

Set LCD display

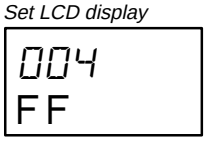

4. When all keys were checked or if the upper panel is opened, the key check mode quits and the test mode (display check mode) comes back.

Downloaded from www.Manualslib.com manuals search engine

SECTION 5
ELECTRICAL ADJUSTMENTS

Outline

- In this set, automatic adjustment of CD and MO can be performed by entering the test mode.
  However, before starting automatic adjustment, the memory clear, power supply adjustment and laser power check must be performed in the manual mode.

Precautions for Adjustment

1. Adjustment must be done in the test mode only.
   After adjusting, release the test mode.
2. Use the following tools and measuring instruments.
   - Test CD disc TDYS-1 (Part No. : 4-963-646-01)
   - SONY MO disc available on the market
   - Digital voltmeter
   - Laser power meter LPM-8001 (Part No. : J-2501-046-A)
   - Thermometer (using the Temperature Correction)
   - Personal computer
   - USB cable
3. Unless specified otherwise, supply DC 1.5V from battery terminals.
4. Switch position
   HOLD ➡ switch ..... ON

Adjustment Sequence

1. NV Reset (item number: 021) (EEPROM clear)
   ↓
2. Temperature Correction (item number: 015)
   ↓
3. Power Supply Manual Adjustment
   ↓
4. Laser Power Check

} Manual Mode

↓

5. CD Overall Adjustment (item number: 031)
   ↓
6. MO Overall Adjustment (item number: 034)

} Overall Mode

↓

7. RESUME Clear (item number 043)

} Manual Mode

↓

8. Rewriting the Patch Data (at replacement of the MAIN board)
   ↓
9. Rewriting the NV values

NV Reset

- **Setting Method of NV Reset**

1. Select the manual mode of the test mode, and set item number 021 NV Reset (see page 14).

   Set LCD display

   021
   ###SCC

2. Press the ENTER/►II key.

   Set LCD display

   021
   ResOK?

3. Press the ENTER/►II key once more.

   Set LCD display

   021
   Res***

   NV reset (after several seconds)

   021
   Reset!

4. Press the ■/CANCEL key to quit the manual mode, and return to the test mode (display check mode).

Temparature Correction

- **Adjustment Method of Temperature Correction**

1. Select the manual mode of the test mode, and set the item number 015 (see page 14).

   Set LCD display

   015
   ###S**

   ***: Adjusted value*

2. Measure the ambient temperature.
3. Adjust with VOLUME + or VOLUME – key so that the adjusted value (hexadecimal value) becomes the ambient temperature.
   (Initial value : 19h = 25˚C, Adjusting range : 80h to 7fh (–128˚C to +127˚C))
4. Press the ENTER/►II key to write the adjusted value.

Power Supply Manual Adjustment

- **Adjustment sequence**

  Adjustment must be done with the following steps.

1. VC1_LOW (PB) adjustment (item number : 741)
2. VC1_HIGH (REC) adjustment (item number : 742)
3. VC2_LOW adjustment (item number : 743)
4. VC2_HIGH adjustment (item number : 744)
5. REG1 adjustment (item number : 745)
6. REG3_LOW1 adjustment (item number : 747)
7. REG3_LOW2 adjustment (item number : 748)
8. REG3_HIGH adjustment (item number : 749)
9. VREC_LOW (X2 speed) adjustment (item number : 751)
10. VREC_MIDDLE (X4 speed)adjustment (item number : 752)
11. VREC_HIGH (HEAD MOTOR) adjustment (item number : 753)

- **Setting Method of Power Supply Manual Adjustment**

1. Make sure that the power supply voltage is 1.5V.
2. Select the manual mode of the test mode (see page 14).
3. Set item number.

Note: Power supply adjustment auto item feed mode (page 23) is available to perform the temperature Correction and Power Supply Adjustment without entering the manual mode.

Downloaded from www.Manualslib.com manuals search engine

- **Adjustment Method of VC1_LOW (PB) (item number: 741)**

Set LCD display

741
AD **

**: *Adjusted value*

1. Connect a digital voltmeter to the TP1928 (VCO1) on the MAIN board, and adjust VOLUME + key (voltage up) or VOLUME – key (voltage down) so that the voltage becomes 2.35 ± 0.05V.

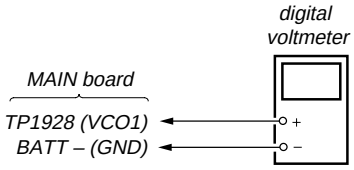

2. Press the ENTER/►II key to write the adjusted value.

Adjustment and Connection Location: MAIN board (see page 22)

- **Adjustment Method of VC1_HIGH (REC) (item number: 742)**

Set LCD display

742
AD **

**: *Adjusted value*

1. Connect a digital voltmeter to the TP1928 (VCO1) on the MAIN board, and adjust VOLUME + key (voltage up) or VOLUME – key (voltage down) so that the voltage becomes 2.50 ± 0.05V.

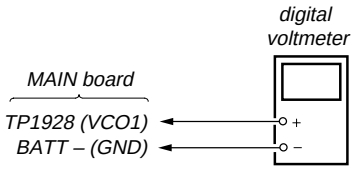

2. Press the ENTER/►II key to write the adjusted value.

Adjustment and Connection Location: MAIN board (see page 22)

- **Adjustment Method of VC2_LOW (item number: 743)**

Set LCD display

743
AD **

**: *Adjusted value*

1. Connect a digital voltmeter to the TP1905 (VCOUT) on the MAIN board, and adjust VOLUME + key (voltage up) or VOLUME – key (voltage down) so that the voltage becomes 2.30 ± 0.01V.

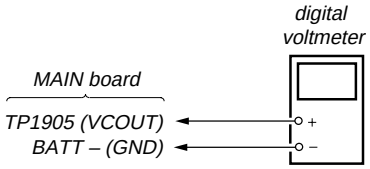

2. Press the ENTER/►II key to write the adjusted value.

Adjustment and Connection Location: MAIN board (see page 22)

- **Adjustment Method of VC2_HIGH (item number: 744)**

Set LCD display

744
AD **

**: *Adjusted value*

1. Connect a digital voltmeter to the TP1905 (VCOUT) on the MAIN board, and adjust VOLUME + key (voltage up) or VOLUME – key (voltage down) so that the voltage becomes 2.55 ± 0.01V.

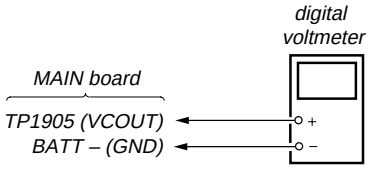

2. Press the ENTER/►II key to write the adjusted value.

Adjustment and Connection Location: MAIN board (see page 22)

Downloaded from www.Manualslib.com manuals search engine

- **Adjustment Method of REG1 (item number: 745)**

Set LCD display

745
AD **

**: *Adjusted value*

1. Connect a digital voltmeter to the TP1909 (REGO1) on the MAIN board, and adjust VOLUME + key (voltage up) or VOLUME – key (voltage down) so that the voltage becomes 2.05 ± 0.01V.

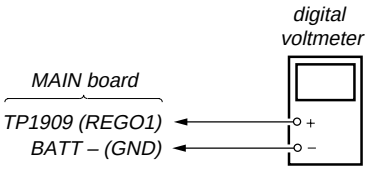

2. Press the ENTER/►II key to write the adjusted value.

Adjustment and Connection Location: MAIN board (see page 22)

- **Adjustment Method of REG3_LOW1 (item number: 747)**

Set LCD display

747
AD **

**: *Adjusted value*

1. Connect a digital voltmeter to the TP1907 (REGO3) on the MAIN board, and adjust VOLUME + key (voltage up) or VOLUME – key (voltage down) so that the voltage becomes 1.25 ± 0.01V.

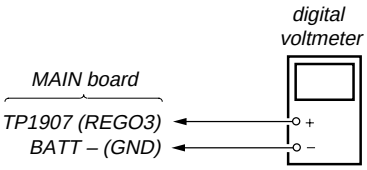

2. Press the ENTER/►II key to write the adjusted value.

Adjustment and Connection Location: MAIN board (see page 22)

- **Adjustment Method of REG3_LOW2 (item number: 748)**

Set LCD display

748
AD **

**: *Adjusted value*

1. Connect a digital voltmeter to the TP1907 (REGO3) on the MAIN board, and adjust VOLUME + key (voltage up) or VOLUME – key (voltage down) so that the voltage becomes 1.25 ± 0.01V.

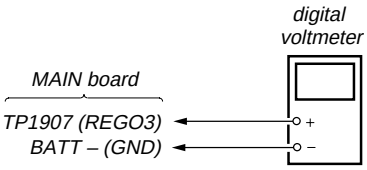

2. Press the ENTER/►II key to write the adjusted value.

Adjustment and Connection Location: MAIN board (see page 22)

- **Adjustment Method of REG3_HIGH (item number: 749)**

Set LCD display

749
AD **

**: *Adjusted value*

1. Connect a digital voltmeter to the TP1907 (REGO3) on the MAIN board, and adjust VOLUME + key (voltage up) or VOLUME – key (voltage down) so that the voltage becomes 1.25 ± 0.01V.

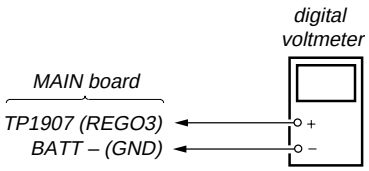

2. Press the ENTER/►II key to write the adjusted value.

Adjustment and Connection Location: MAIN board (see page 22)

Downloaded from www.Manualslib.com manuals search engine

- **Adjustment Method of VREC_LOW (X2 speed) (item number: 751)**

Set LCD display

751
AD **

**: *Adjusted value*

1. Connect a digital voltmeter to the TP1620 (VREC) on the MAIN board, and adjust [VOLUME +] key (voltage up) or [VOLUME –] key (voltage down) so that the voltage becomes 1.20 ± 0.02V.

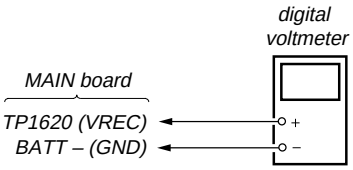

2. Press the [ENTER/►II] key to write the adjusted value.

Adjustment and Connection Location: MAIN board (see page 22)

- **Adjustment Method of VREC_MIDDLE (X4 speed) (item number: 752)**

Set LCD display

752
AD **

**: *Adjusted value*

1. Connect a digital voltmeter to the TP1620 (VREC) on the MAIN board, and adjust [VOLUME +] key (voltage up) or [VOLUME –] key (voltage down) so that the voltage becomes 1.20 ± 0.02V.

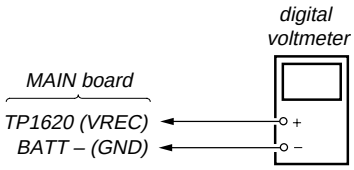

2. Press the [ENTER/►II] key to write the adjusted value.

Adjustment and Connection Location: MAIN board (see page 22)

- **Adjustment Method of VREC_HIGH (HEAD MOTOR) (item number: 753)**

Set LCD display

753
AD **

**: *Adjusted value*

1. Connect a digital voltmeter to the TP1620 (VREC) on the MAIN board, and adjust [VOLUME +] key (voltage up) or [VOLUME –] key (voltage down) so that the voltage becomes between 1.65V and 1.75V.

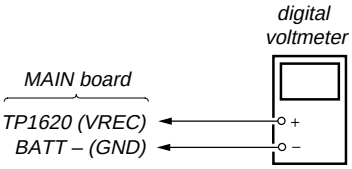

2. Press the [ENTER/►II] key to write the adjusted value.

Adjustment and Connection Location: MAIN board (see page 22)

Downloaded from www.Manualslib.com manuals search engine

Adjustment/checking and Connection Location:

MAIN BOARD (SIDE B)

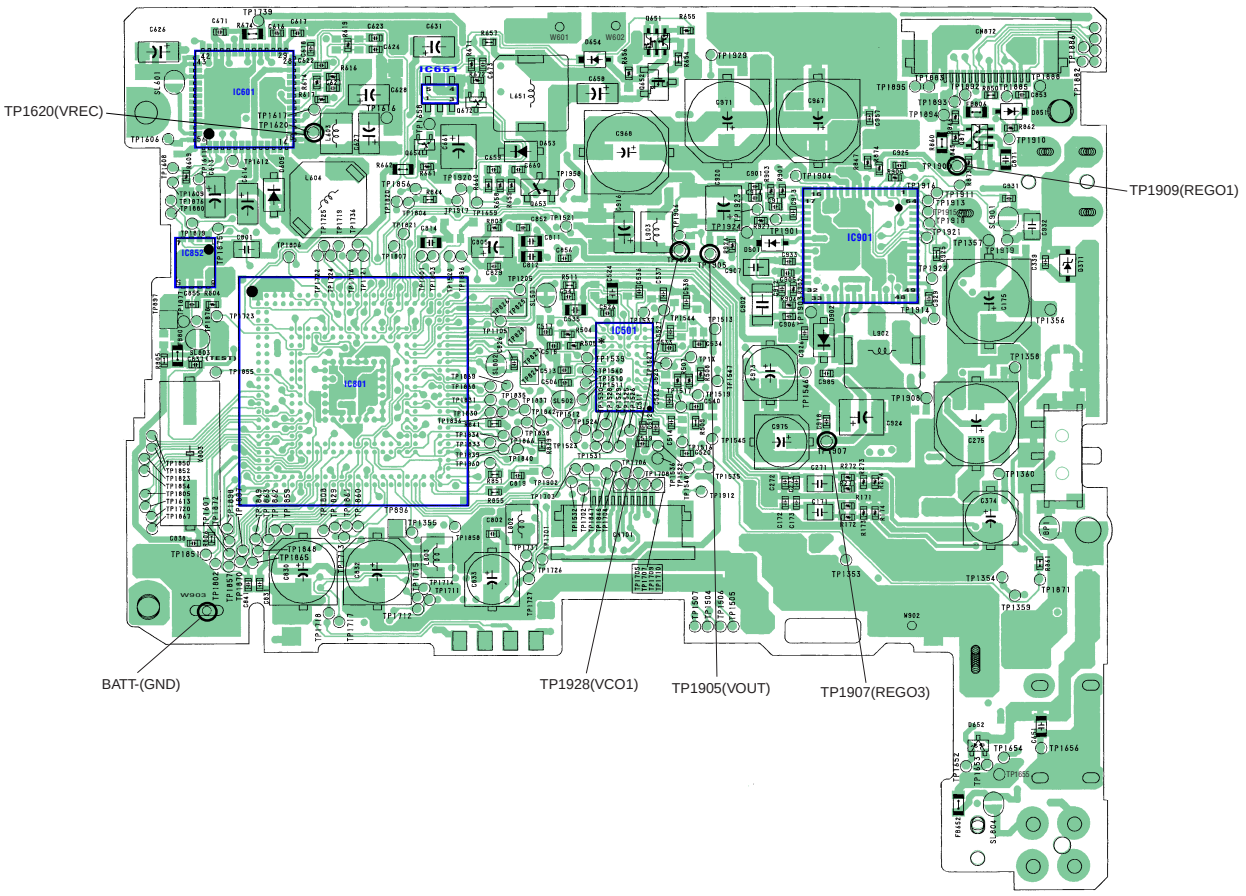

Downloaded from www.Manualslib.com manuals search engine

Power Supply Adjustment Auto Item Feed

Note: This mode is available to perform the temperature correction and power supply adjustment without entering the manual mode.

- Setting method of power supply adjustment auto item feed mode.

1. Set the test mode (see page 13)
2. Press the [⏮] key to activate the overall adjustment mode.

Set LCD display

```
000
Assy**
```

3. Press the [VOLUME –] key to set the temperature correction mode.

Set LCD display

```
015
###S**
```

**: Adjusted value*

4. To change the initial value adjust with the [VOLUME +] or [VOLUME –] key.
   Press the [ENTER/►II] key to write the adjusted value, and the item number increases automatically.
   When not writing the adjusted value, press the [⏭] key to move to the next item.

Set LCD display

```
741
 AD  **
```

**: Adjusted value*

5. Connect a digital voltmeter to the measuring points on the MAIN board, and adjust the voltage with the [VOLUME +] or [VOLUME –] key. (see page 18 to 21)
   Press the [ENTER/►II] key to write the adjusted value, and the item number increases automatically.
6. When not writing the adjusted value, press the [⏭] key to move to the next item. The [⏮] key is available to back to the last item.
7. The following message is displayed after all power supply adjustments finish.

Set LCD display

```
000
ADJ  OK
```

8. Press the [■/CANCEL] key to return the test mode (display check mode).

- **Configuration of power supply adjustment auto item feed**

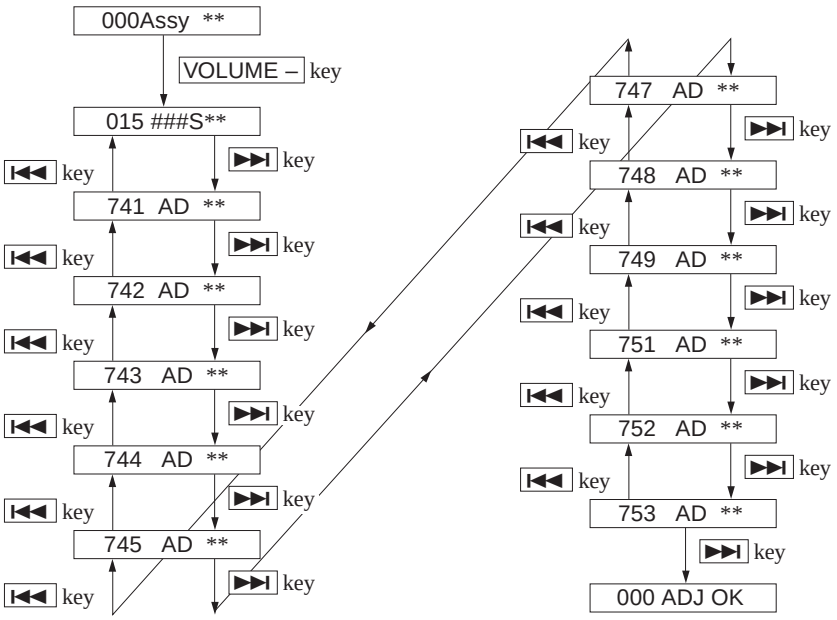

Downloaded from www.Manualslib.com manuals search engine

Laser Power Check

Note: If result of measurement of the laser power does not satisfy the specification, either replace the OP (optical pick-up unit) or check whether the laser circuit block is working correctly.
When the result of laser power measurement does not satisfy the specification even though the laser circuit block is confirmed to be working correctly, replace the OP (optical pick-up unit).

- **Connection**

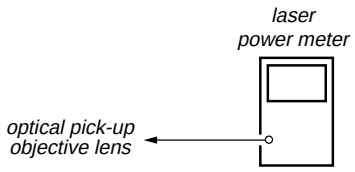

- **Checking and adjusting method**

1. Select the manual mode of test mode (see page 14), and set the laser power checking mode (item number 010).

Set LCD display

2. Press the ⏮ key continuously until the optical pick-up moves to the most inward track.
3. Open the cover and set the laser power meter on the objective lens of the optical pick-up.
4. Press the ⏭ key, and set the laser MO read check mode (item number 011).

Set LCD display

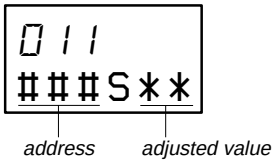

5. Check that the laser power meter reading is 0.800 ± 0.10 mW.
6. Press the ⏭ key, and set the laser CD read check mode (item number 012).

Set LCD display

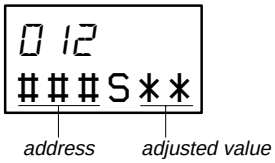

7. Check that the laser power meter reading is 0.910 ± 0.11 mW.
8. Press the ⏭ key, and set the laser MO (X2 speed) write check mode (item number 013).

Set LCD display

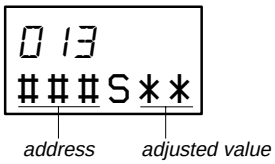

9. Check that the laser power meter reading is 4.95 ± 0.59 mW.
10. Press the ⏭ key, and set the laser MO (X4 speed) write check mode (item number 014).

Set LCD display

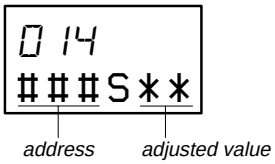

11. Check that the laser power meter reading is 5.93 ± 0.71mW.
12. Press the ■/CANCEL key to quit the manual mode, and activate the test mode (display check mode).

Overall Adjustment Mode

- **Configuration of Overall Adjustment Mode**

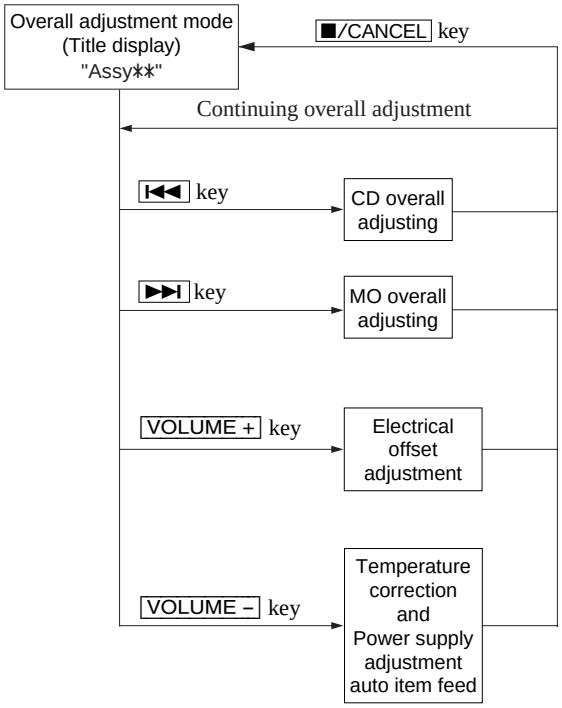

- **Overall Adjustment Mode (Title Display)**

Set LCD display

◌: (Disc mark) At end of power supply adjustment: Outside lit
***: Left side = MO overall adjustment information*
F: MO overall adjustment completed*
1: Manual adjustment exists (overall adj. not completed)*
0: Not adjusted*
Right side = CD overall adjustment information
**F: CD overall adjustment completed*
**1: Manual adjustment exists (overall adj. not completed)*
**0: Not adjusted*

Note: Adjust the CD first, when performing adjustment.

Downloaded from www.Manualslib.com manuals search engine

- **Adjustment Method of CD and MO Overall Adjustment Mode**

1. Set the test mode (see page 13).
2. Press the [⏮] key to activate the overall adjustment mode.

Set LCD display

000
Assy11

3. Insert CD disc in the set, and press the [⏮] key to set the CD overall adjustment mode. Automatic adjustments are made.

Set LCD display

XXX
CD RUN

XXX: Item number for which an adjustment is being executed.

4. In case of CD overall adjustment NG, readjust from the NV reset (see page 18), The temperature correction (see page 18) may be omitted.

Set LCD display

000
*** NG

****: NG item number.*

5. If OK through the CD overall adjustments, then perform MO overall adjustments.

Set LCD display

000
CD OK

6. Insert MO disc in the set, and press the [⏭] key to set the MO overall adjustment mode. Automatic adjustments are made.

Set LCD display

XXX
MO RUN

XXX: Item number for which an adjustment is being executed.

7. In case of MO overall adjustment NG, readjust from the NV reset (see page 18). The temperature correction (see page 18) may be omitted.

Set LCD display

000
*** NG

****: NG item number.*

8. If OK through the MO overall adjustments, press the [■/CANCEL] key to return to the test mode and terminate the overall adjustment mode.

Set LCD display

000
MO OK

- **Overall Adjustment error message**

The following message will be displayed if adjustment procedure is mistaken in the CD and MO overall adjustment.

Message	Display timing	Description
CLOSE!	During CD/MO/DISC automatic distinction overall adjustment	DISC is not inserted.
Set CD!	During MO/DISC automatic distinction overall adjustment During offset adjustment	• CD overall adjustment is not completed in the MO overall adjustment. • CD and MO overall adjustment is not completed in the offset adjustment.
Set MO!	During offset adjustment	MO overall adjustment is not completed in the offset adjustment
NoTmp!	During CD/MO/DISC automatic distinction overall adjustment	Temperature correction (item number 015) is not finished.

- **CD and MO Overall Adjustment Items**

1. CD overall adjustment items

Item No.	Description
761	VC,VR power supply H/L selection
300	HPIT setting . servo OFF
561	SLED inward movement
562	SLED outward movement
High reflection electrical offset adjustment	
312	Laser ON . Focus UP . vc correction
ALFA offset adjustment	
313	IJ offset adjustment
314	FE offset adjustment
HPIT adjustment	
320	Focus servo ON
324	TE offset adjustment 1
321	TE gain adjustment
328	TWPP gain adjustment
324	TE offset adjustment 1
332	TE offset adjustment 2
330	Tracking servo ON
336	ABCD gain adjustment
337	KF gain correction
338	RF gain adjustment
344	FCS gain adjustment
345	TRK gain adjustment
521	Two-axis sensitivity (outer position)
522	Two-axis sensitivity (outer position)
300	HPIT setting . servo OFF

Downloaded from www.Manualslib.com manuals search engine

2. MO overall adjustment items

Item No.	Description
716	VC,VR power supply H/L selection
100	R_GRV setting . servo OFF
Low reflection electrical offset adjustment	
112	Laser ON . Focus UP vc correction
ALFA offset adjustment	
113	IJ offset adjustment
114	FE offset adjustment
118	Wpp denominator offset adjustment
LPIT adjustment	
200	LPIT setting . servo OFF
561	SLED inward movement
220	Focus servo ON
224	TE offset adjustment 1
221	TE gain adjustment
224	TE offset adjustment 1
232	TE offset adjustment 2
230	Tracking servo ON
236	ABCD gain adjustment
237	KF gain correction
238	RF gain adjustment
244	Focus gain adjustment
245	Tracking gain adjustment
READ GRV adjustment 1	
100	R_GRV setting . servo OFF
562	SLED outward movement
120	Focus servo ON
122	TON offset adjustment
121	TE gain adjustment
122	TON offset adjustment
123	TEIN offset adjustment
124	TWPP offset adjustment 1
130	Tracking servo ON
131	TWPP offset adjustment 1
136	ABCD gain adjustment
137	KF gain correction
139	ADIP BPF f0 adjustment
144	Focus gain adjustment
145	Tracking gain adjustment
134	TWPP gain adjustment
131	TWPP offset adjustment 1
132	TWPP offset adjustment 2
149	TWPP OP offset adjustment
WRITE GRV adjustment	
410	HEAD DOWN . GRV servo ON
420	READ → WRITE selection
421	TE gain adjustment
423	TEIN offset adjustment
430	Tracking servo ON
431	TWPP offset adjustment 1
436	ABCD gain adjustment

Item No.	Description
444	Focus gain adjustment
445	Tracking gain adjustment
434	TWPP gain adjustment
431	TWPP offset adjustment 1
432	TE offset adjustment 2
449	TWPP OP offset adjustment
410	WRITE → READ selection
411	TWPP offset adjustment 1
412	TE offset adjustment 2
418	TWPP OP offset adjustment
490	HCLV LCLV selection process
450	HEAD DOWN . GRV servo ON
460	READ → WRITE selection
461	TE gain adjustment
463	TEIN offset adjustment
470	Tracking servo ON
471	TWPP offset adjustment 1
476	ABCD gain adjustment
484	Focus gain adjustment
485	Tracking gain adjustment
451	TWPP offset adjustment 1
452	TE offset adjustment 2
460	READ → WRITE selection
470	Tracking servo ON
474	TWPP gain adjustment
471	TWPP offset adjustment 1
472	TE offset adjustment 2
489	TWPP OP offset adjustment
450	WRITE → READ selection
451	TWPP offset adjustment 1
452	TE offset adjustment 2
458	TWPP OP offset adjustment
448	30 sec continuous REC
400	GRV setting . servo OFF . HEAD UP
READ GRV adjustment 2	
120	Focus servo ON
130	Tracking servo ON
138	RF gain adjustment
141	FOCUS_BIAS
035	Stray light offset measurement
100	R_GRV setting . servo OFF

Downloaded from www.Manualslib.com manuals search engine

Remuse Clear

Perform the Resume clear when all adjustments completed.

- **Resume Clear Setting Method**

1. Select the manual mode of the test mode, and set item number 043 (see page 14).

Set LCD display

```
043
###S00
```

###: Address

2. Press the [ENTER/►II] key.

Set LCD display

```
043
Res***
```

↓ *Resume clear complete*

```
043
ResClr
```

3. Press the [■/CANCEL] key to return to the test mode (display check mode).

Downloaded from www.Manualslib.com manuals search engine

Rewriting the Patch Data at Replacement of MAIN Board

This set requires the patch data in the nonvolatile memory (IC852) to be rewritten using the application, when the MAIN board was replaced.

Caution: The application that meets the microcomputer version in this set must be used when rewriting the patch data. Rewriting the patch data using the application not suitable for the microcomputer version could cause the set to malfunction.
For a checking method of the microcomputer version, see “SECTION 4 TEST MODE” (page 13).

- **Preparation**

1. USB cable (attached to the set)
2. Personal computer in which the Net MD Driver has been installed. (For further information, see “System requirements” (page 4) in “SECTION 1 SERVICING NOTES”)
3. Application “USB_PatchWriter” for patch data rewriting

- **How to Get the Application “USB_PatchWriter” for Patch Data Rewriting**

Contact our service technical support section for PA products to get the application.

- **Pre-check**

1. Check the microcomputer version in this set. (For a checking method of the microcomputer version, see “SECTION 4 TEST MODE” (page 13).)
2. Check that the Net MD Driver has been installed in the personal computer.
3. Make sure that the set is in the Normal mode.
   Note: Do not rewrite the patch data in the Test mode.

- **Rewriting the Patch Data**

1. Connect the set to the personal computer with the USB cable.
2. Start the application “USB_PatchWriter”.
3. Make sure that the following window opens.
4. Click the [USB CONNECT] button.

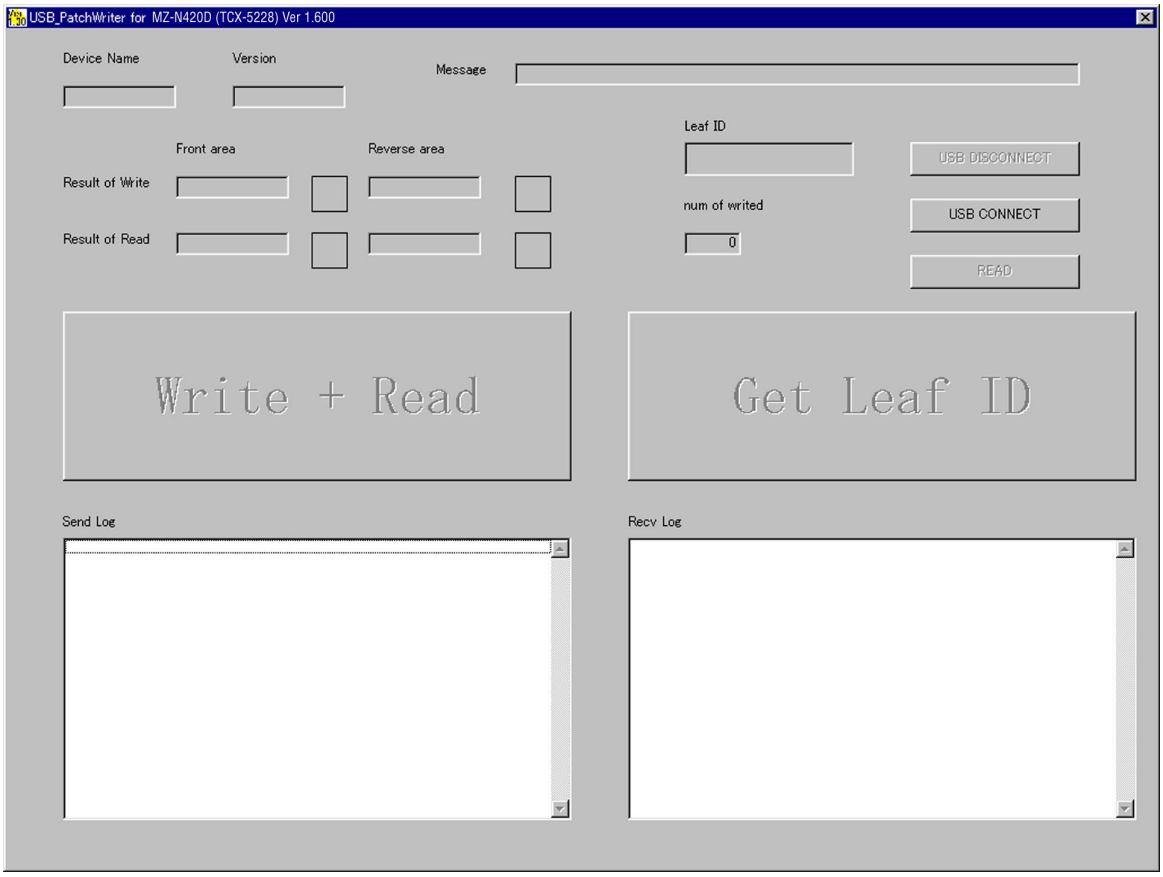

Downloaded from www.Manualslib.com manuals search engine

5. Confirm that the model and version indicated on the title bar coincide with the codes displayed in the Device Name block and the Version block in the window.

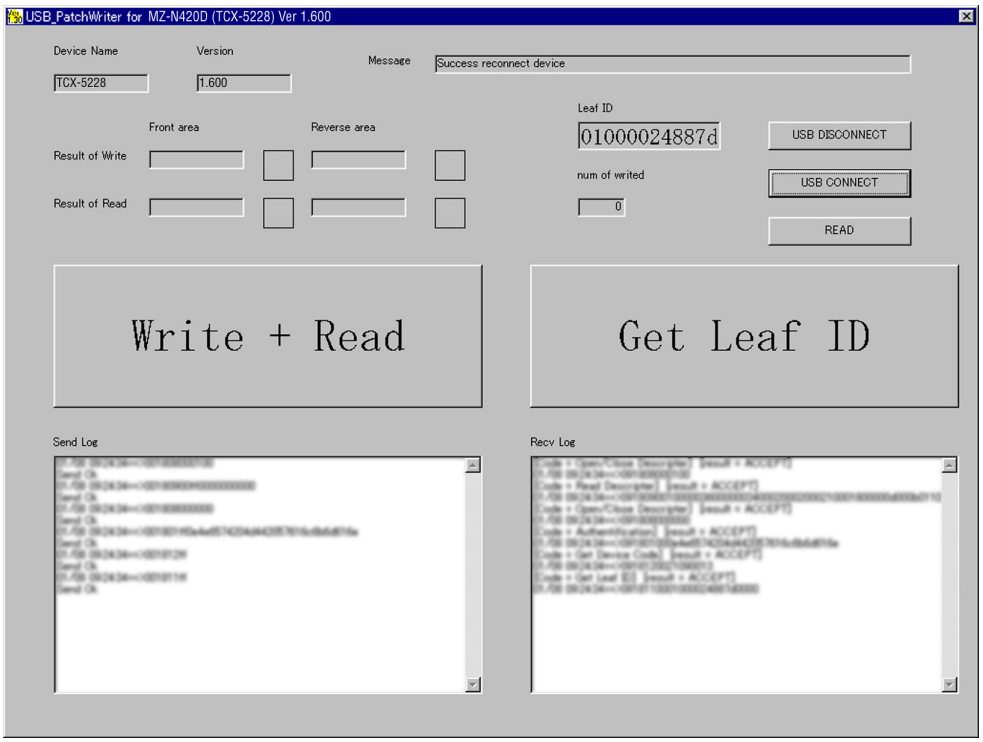

6. Click the [Write + Read] button.
   The patch data writing and the verify processing will be executed automatically in the following order:
   1) Writing to patch area (front area)
   2) Writing to patch area (reverse area)
   3) Verifying patch area (front area)
   4) Verifying patch area (reverse area)
7. The operation will terminate with the ○ (blue) mark given to all areas.
   If the × (red) mark is given to any area, the nonvolatile memory will be faulty.

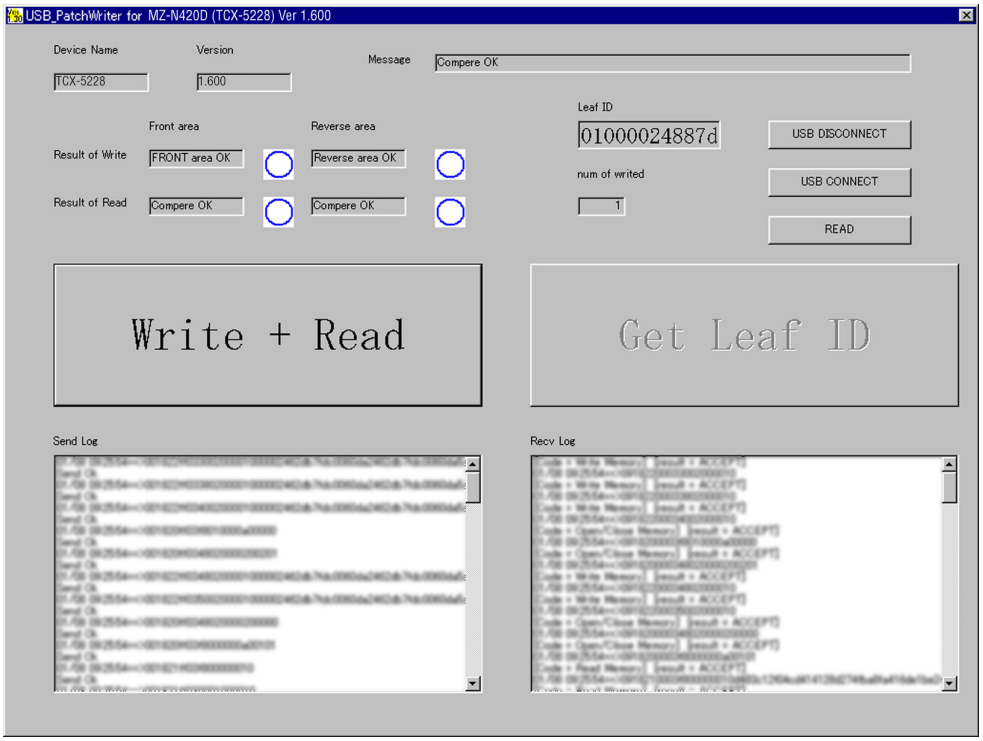

Downloaded from www.Manualslib.com manuals search engine

• Confirmation of contents of the patch data rewrited

1. Click the [READ] button to confirm the contents of the patch data rewrited.

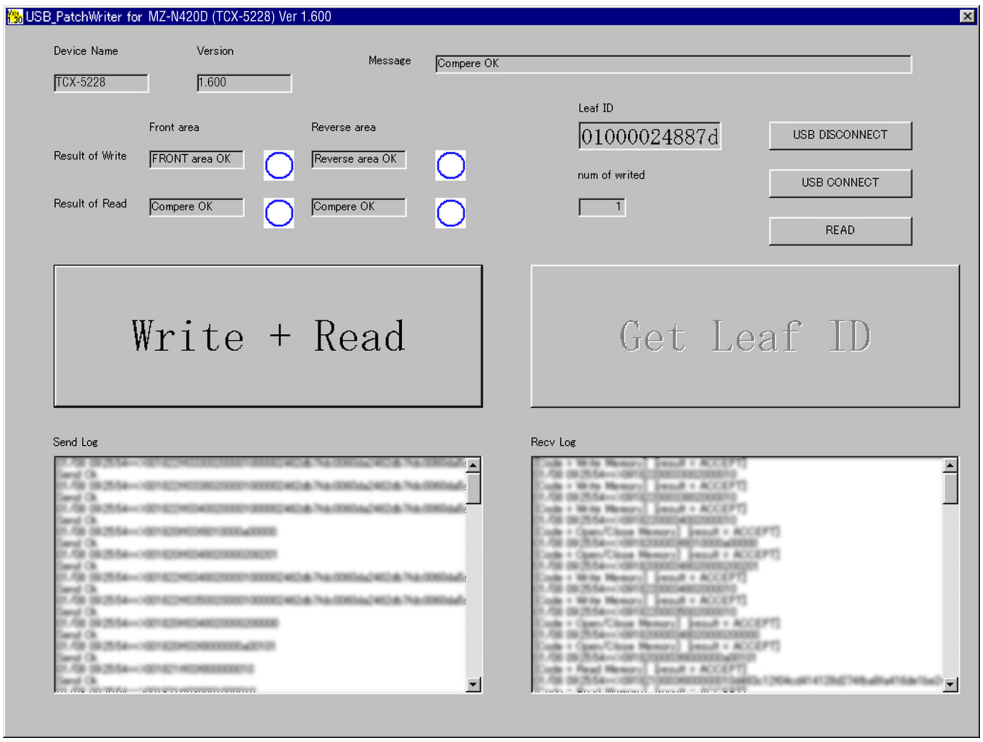

2. The application reads out the front and reverse patch areas and displays the results in the edit box.
   Confirm that the upper column coincides with the lower column as the following window.
3. Click the [OK] button to close the window.

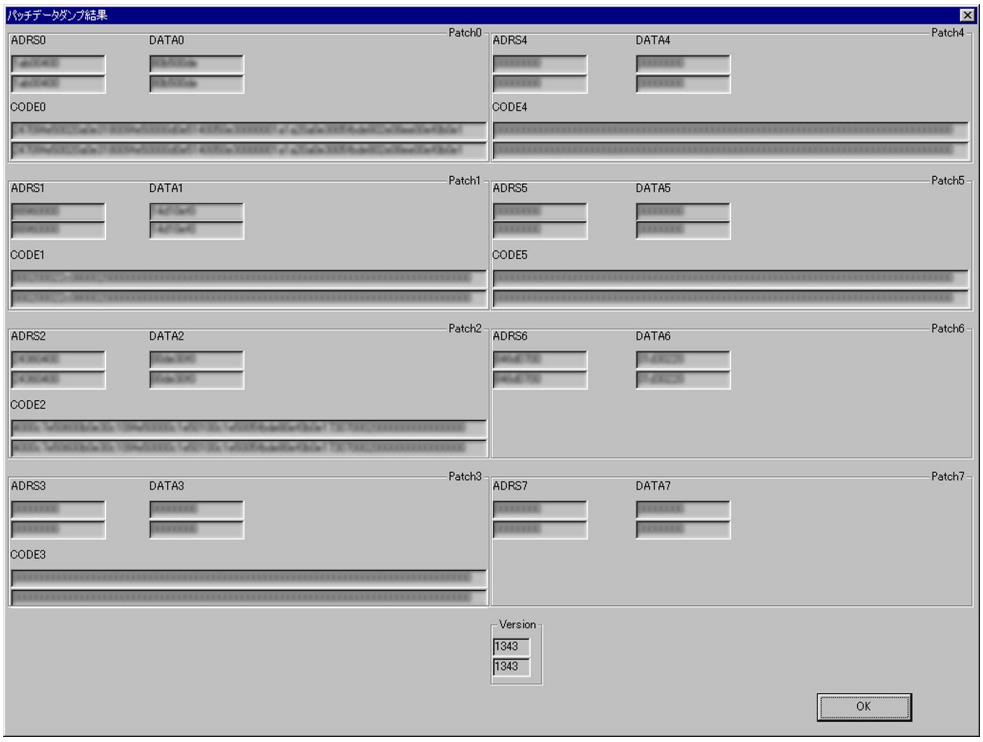

Downloaded from www.Manualslib.com manuals search engine

• Disconnecting the USB cable

Disconnect the USB cable as the following procedure after rewriting the patch data and confirmation.

Note : When the following procedure is not completed but USB cable is extracted, the application does not recognize the set at exchanging of the set.

1. Click the [USB DISCONNECT] button.

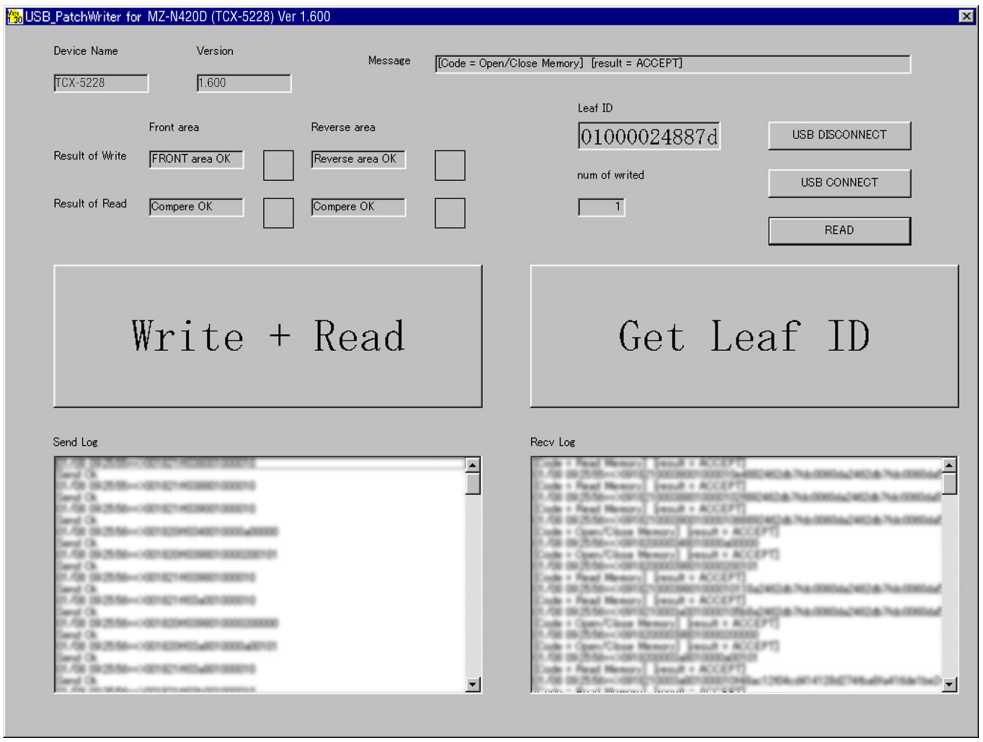

2. Confirm that "You can change another device" is displayed in the message block.

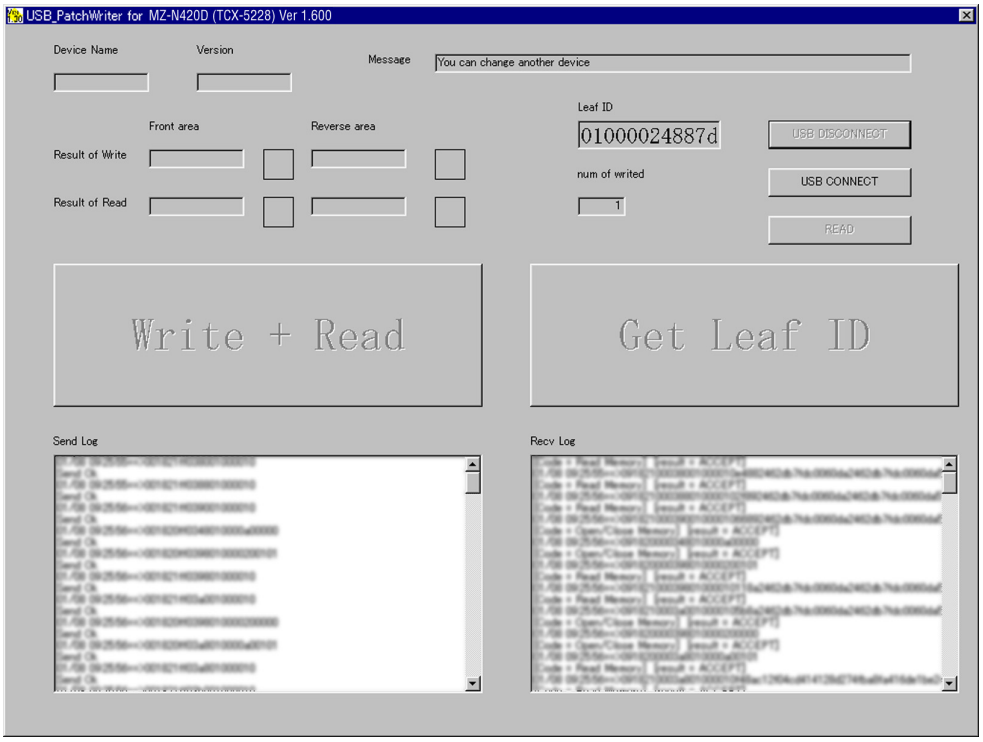

3. Disconnect the USB cable from the personal computer and the set.

Downloaded from www.Manualslib.com manuals search engine

Rewriting the NV values

Caution: The application that meets the microcomputer version in this set must be used when rewriting the NV values. Rewriting the NV values using the application not suitable for the microcomputer version could cause the set to malfunction.
For a checking method of the microcomputer version, see “SECTION 4 TEST MODE” (page 13).

• Preparation

1. USB cable (attached to the set)
2. Personal computer in which the Net MD Driver has been installed. (For further information, see “System requirements” (page 4) in “SECTION 1 SERVICING NOTES”)
3. Application “NVWriter” for NV values rewriting

• How to get the application “NVWriter” for NV values rewriting

Contact our service technical support section for PA products to get the application.

• Pre-check

1. Check the microcomputer version in this set. (For a checking method of the microcomputer version, see “SECTION 4 TEST MODE” (page 13).)
2. Check that the Net MD Driver has been installed in the personal computer.
3. Make sure that the set is in the Normal mode.
   Note: Do not rewrite the NV values in the Test mode.

• Rewriting the NV values

1. Connect the set to the personal computer with the USB cable.
2. Start the application “NVWriter”.
3. Make sure that the following window opens.
4. Click the [USB CONNECT] button.

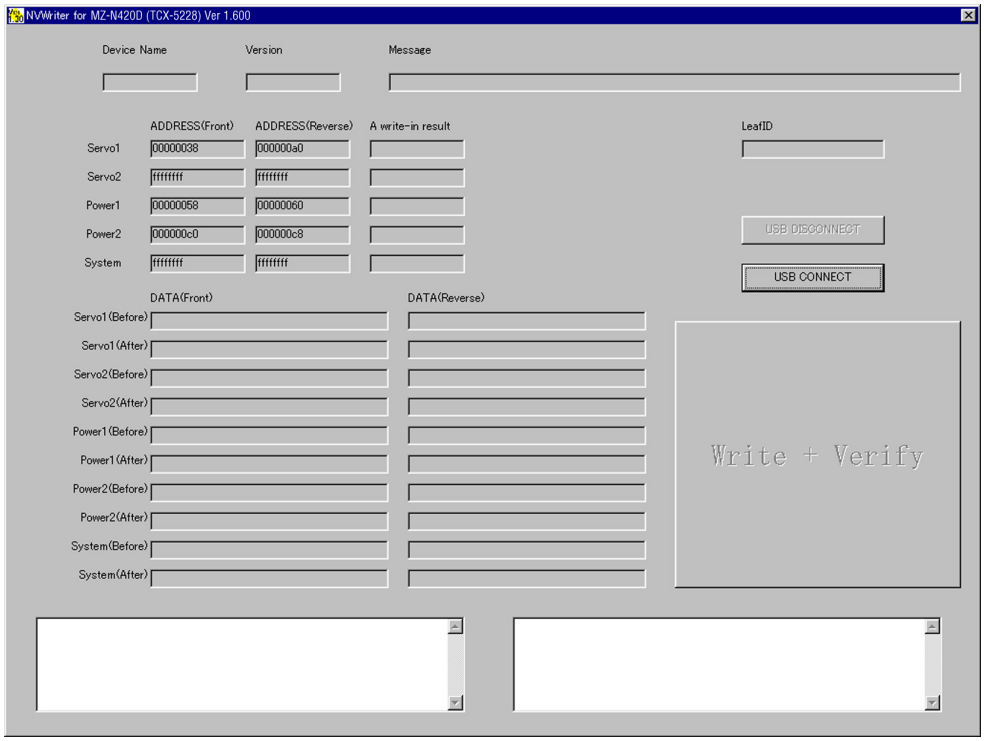

Downloaded from www.Manualslib.com manuals search engine

5. Confirm that the model and version indicated on the title bar coincide with the codes displayed in the Device Name block and the Version block in the window.

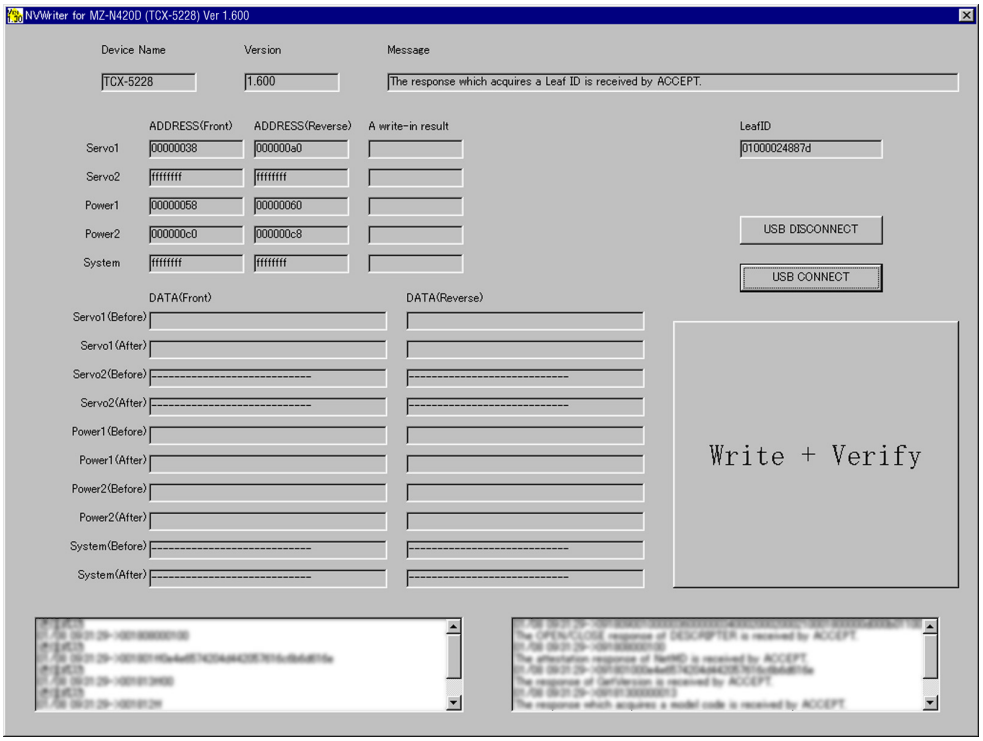

6. Click the [Write + Verify] button.
   The NV values writing and the verify processing will be executed automatically in the following order:
   1) Writing to Servo 1 area (front area)
   2) Writing to Servo 1 area (reverse area)
   3) Writing to Power Supply 1 area (front area)
   4) Writing to Power Supply 1 area (reverse area)
   5) Writing to Power Supply 2 area (front area)
   6) Writing to Power Supply 2 area (reverse area)
   7) Verifying to Servo 1 area (front area)
   8) Verifying to Servo 1 area (reverse area)
   9) Verifying to Power Supply 1 area (front area)
   10) Verifying to Power Supply 1 area (reverse area)
   11) Verifying to Power Supply 2 area (front area)
   12) Verifying to Power Supply 2 area (reverse area)

Downloaded from www.Manualslib.com manuals search engine

7. The operation will terminate with “Compere OK” given to all areas.
   If “Compere NG” is given to any area, the nonvolatile memory will be faulty.

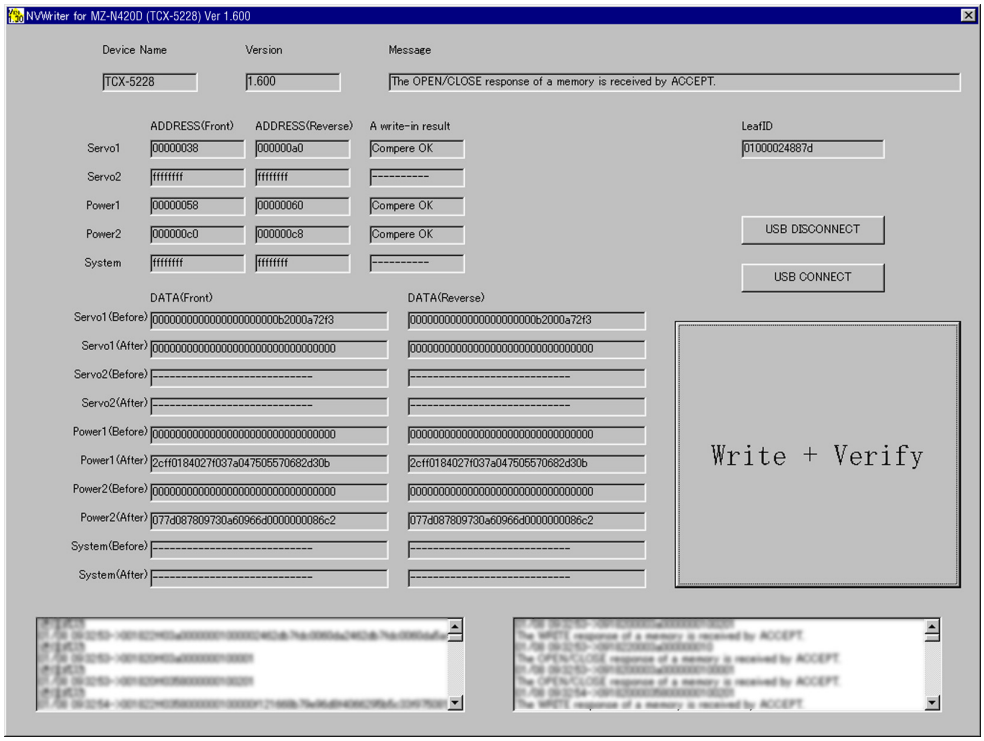

8. Click the [USB DISCONNECT] button.

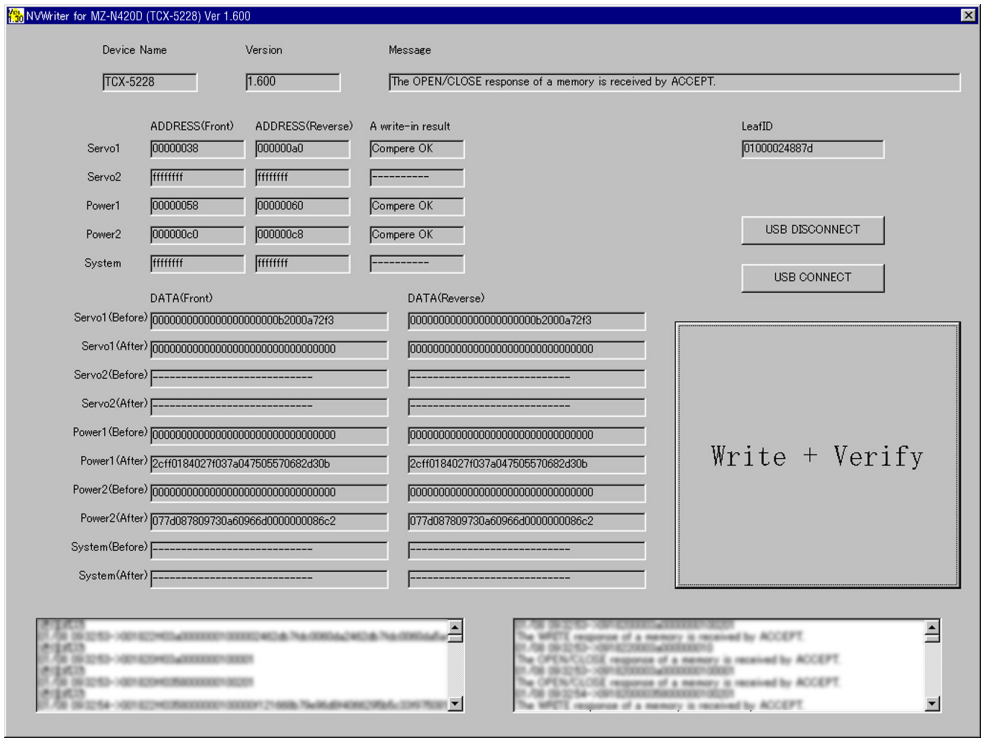

Downloaded from www.Manualslib.com manuals search engine

9. Confirm that the window becomes as shown below where the [Write + Verify] button is inactive.

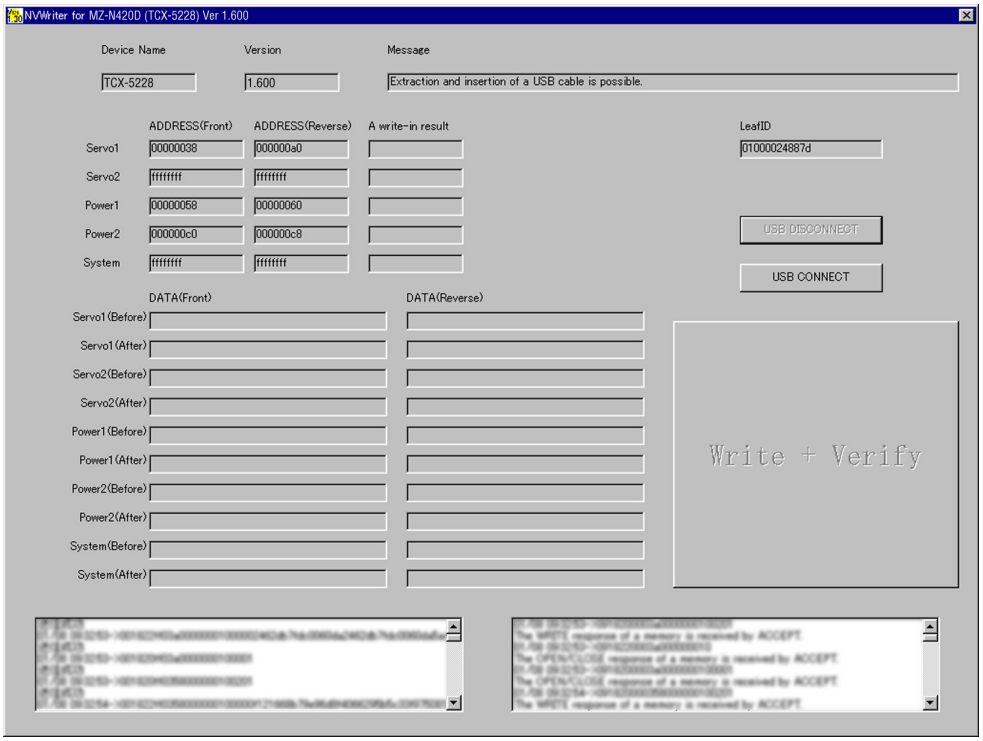

10. Disconnect the USB cable from the personal computer and the set.

Downloaded from www.Manualslib.com manuals search engine

SECTION 6
DIAGRAMS

NOTE FOR PRINTED WIRING BOARD AND SCHEMATIC DIAGRAMS

Note on Printed Wiring Board:

- ○——— : parts extracted from the component side.
- ——— : parts extracted from the conductor side.
- ▬ : Pattern from the side which enables seeing.

(The other layers' patterns are not indicated.)

Caution:	
Pattern face side: (Side A)	Parts on the pattern face side seen from the pattern face are indicated.
Parts face side: (Side B)	Parts on the parts face side seen from the parts face are indicated.

- MAIN board is four-layer printed board.
  However, the patterns of layers 2 and 3 have not been included in this diagrams.

* Replacement of IC501,IC801 on MAIN board requires a special tool.

- Lead Layouts

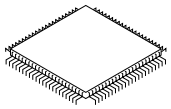

Lead layout of conventional IC

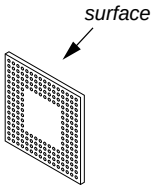

CSP (chip size package)

☆When IC852 is damaged, replace the MAIN board.

Note on Schematic Diagram:

- All capacitors are in µF unless otherwise noted. (p: pF) 50 WV or less are not indicated except for electrolytics and tantalums.
- All resistors are in Ω and 1/4 W or less unless otherwise specified.
- % : indicates tolerance.
- △ : internal component.
- ▭ : panel designation.

Note:	Note:
The components identified by mark ⚠ or dotted line with mark ⚠ are critical for safety. Replace only with part number specified.	Les composants identifiés par une marque ⚠ sont critiques pour la sécurité. Ne les remplacer que par une pièce portant le numéro spécifié.

- ▬ : B+ Line.
- Total current is measured with MD installed.
- Power voltage is dc 1.5 V and fed with regulated dc power supply from battery terminal.
- Voltages and waveforms are dc with respect to ground in playback mode.
  no mark : PLAYBACK
  ( ) : REC
  ∗ : Impossible to measure
- Voltages are taken with a VOM (Input impedance 10 MΩ). Voltage variations may be noted due to normal production tolerances.
- Waveforms are taken with a oscilloscope. Voltage variations may be noted due to normal production tolerances.
- Circled numbers refer to waveforms.
- Signal path.
  ⇨ : PLAYBACK
  ➡ : RECORD
  ▷ : USB

- The voltage and waveform of CSP (chip size package) cannot be measured, because its lead layout is different form that of conventional IC.

* Replacement of IC501,IC801 on MAIN board requires a special tool.

☆When IC852 is damaged, replace the MAIN board.

- Abbreviation
  CND: Canadian model

Downloaded from www.Manualslib.com manuals search engine

MEMO

- **Waveforms**

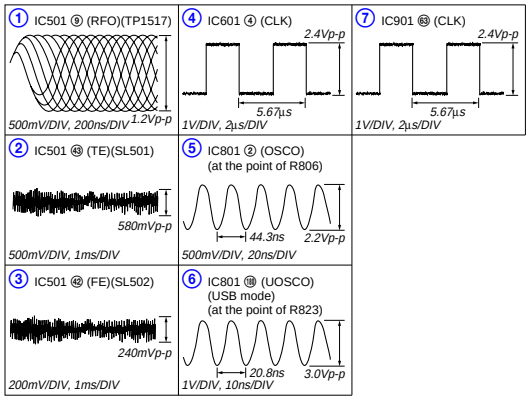

Downloaded from www.Manualslib.com manuals search engine

6-1. BLOCK DIAGRAM

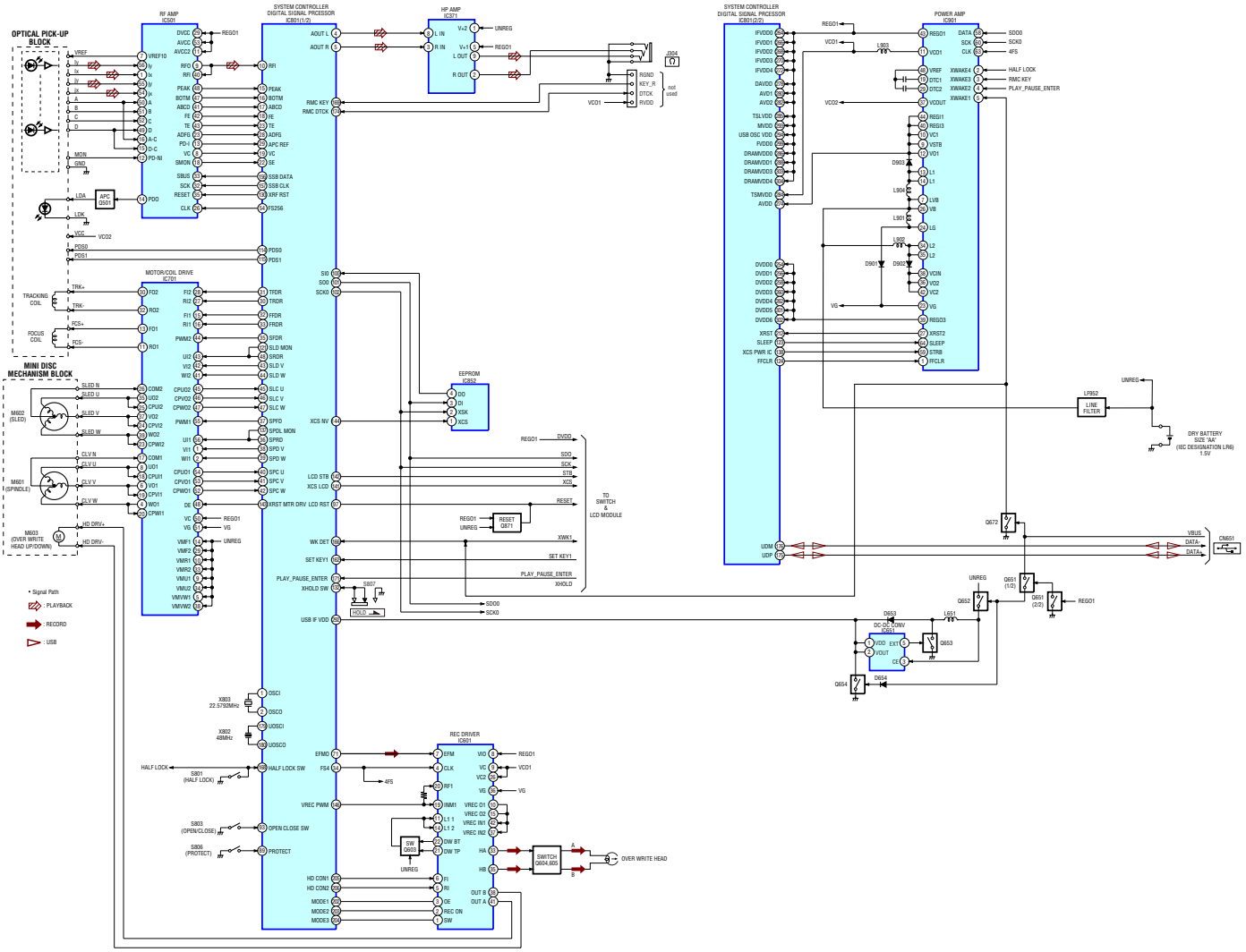

Downloaded from www.Manualslib.com manuals search engine

6-2. PRINTED WIRING BOARD – MAIN BOARD (SIDE A) – :Uses unleaded solder.

【MAIN BOARD】(SIDE A)

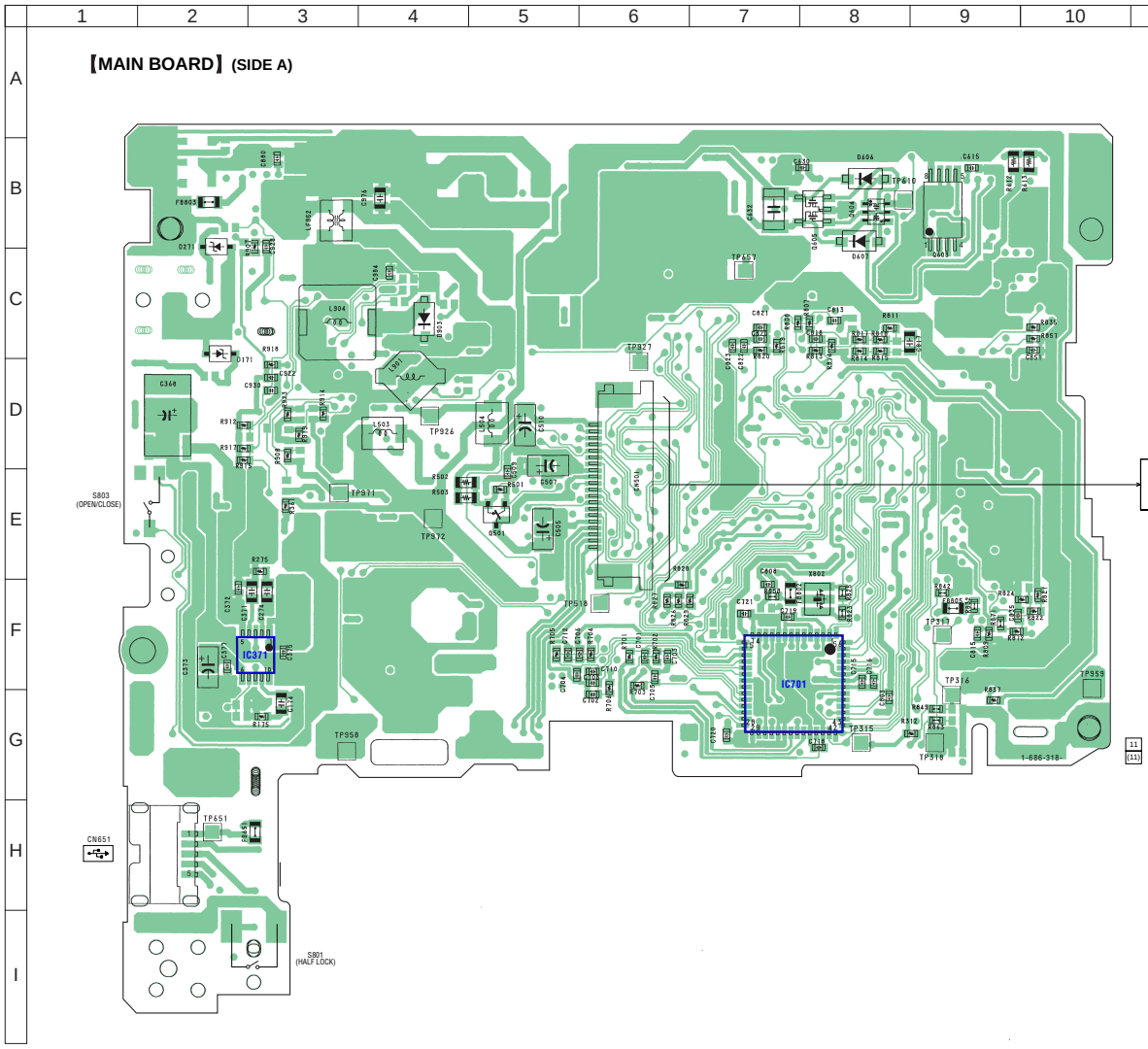

- **Semiconductor Location**

Ref. No.	Location
D171	C-2
D271	B-2
D606	B-8
D607	B-8
D903	C-4
IC371	F-3
IC701	F-7
Q501	E-5
Q603	B-9
Q604	B-8
Q605	B-8

Downloaded from www.Manualslib.com manuals search engine

6-3. PRINTED WIRING BOARD – MAIN BOARD (SIDE B) – :Uses unleaded solder.

☆ When IC852 is damaged, replace the MAIN board.

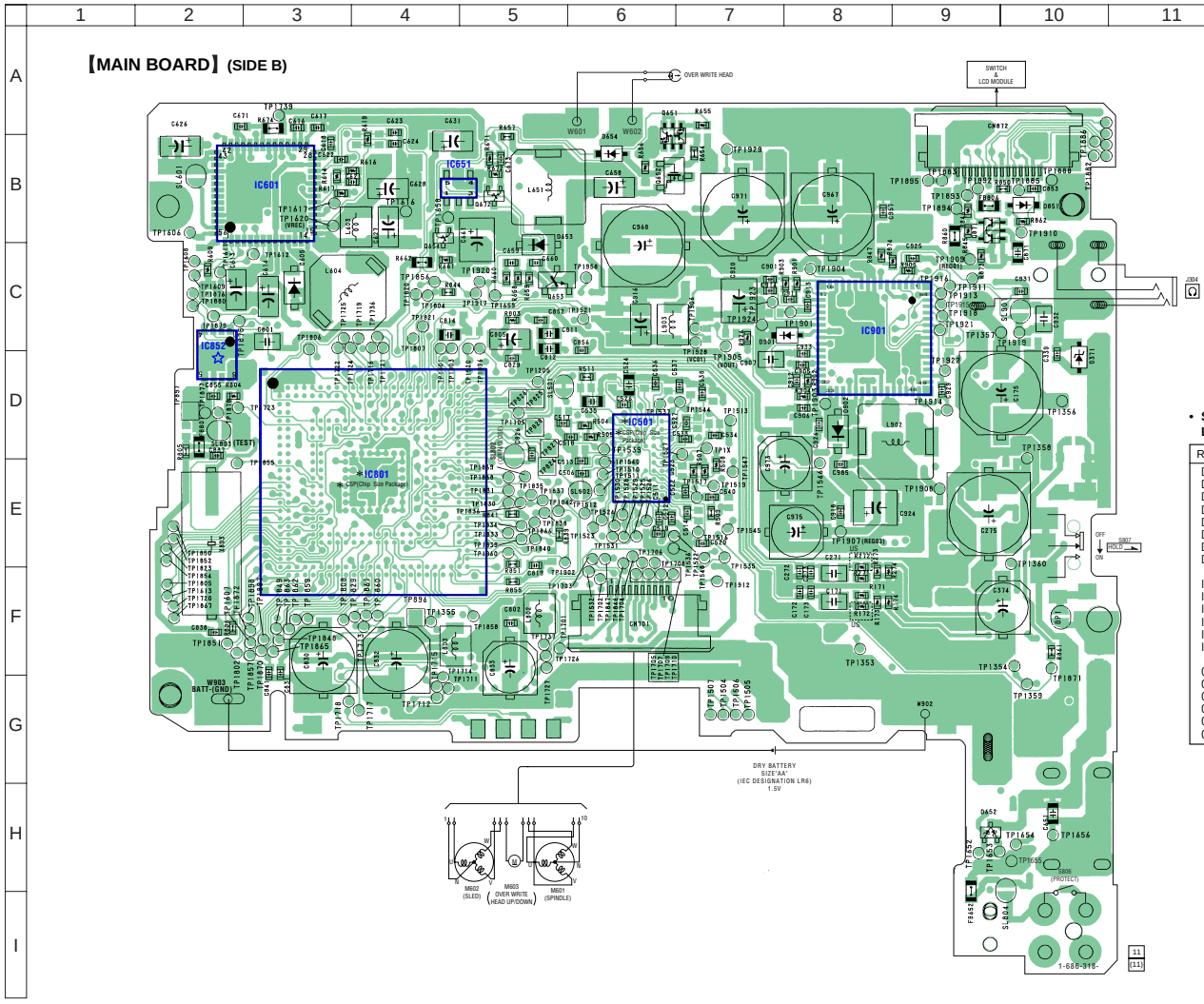

- **Semiconductor Location**

Ref. No.	Location
D371	D-10
D605	C-3
D652	H-9
D653	C-5
D654	B-6
D851	B-10
D901	C-8
D902	D-8
IC501	D-6
IC601	B-3
IC651	B-4
IC801	E-4
IC852	C-2
IC901	C-8
Q651	B-6
Q652	B-6
Q653	C-5
Q654	B-4
Q672	B-5
Q871	B-9

Downloaded from www.Manualslib.com manuals search engine

6-4. SCHEMATIC DIAGRAM – MAIN BOARD (1/4) – • See page 46, 48 for IC Block Diagrams. • See page 37 for Waveforms.

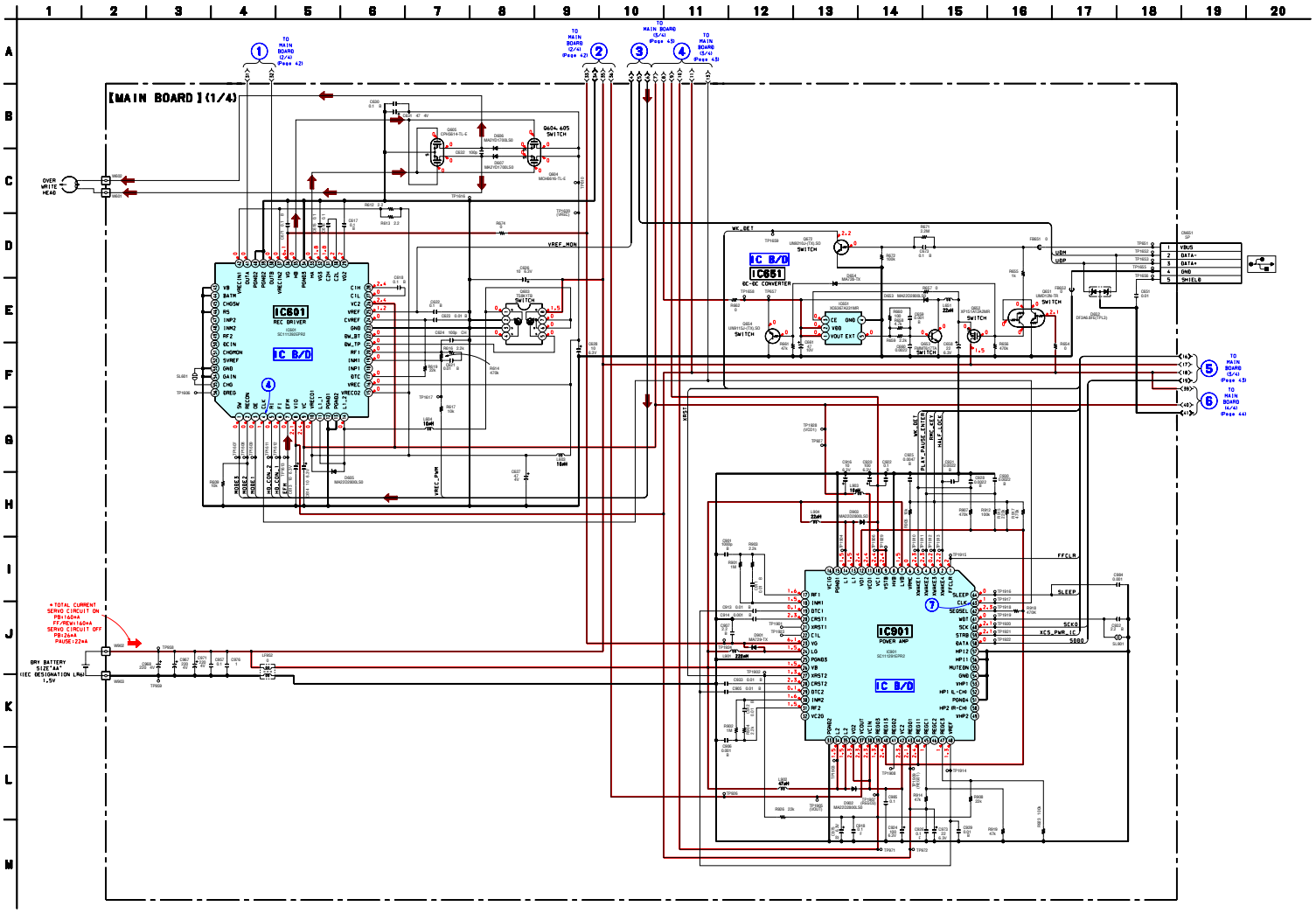

Downloaded from www.Manualslib.com manuals search engine

6-5. SCHEMATIC DIAGRAM – MAIN BOARD (2/4) – • See page 45, 47 for IC Block Diagrams. • See page 37 for Waveforms.

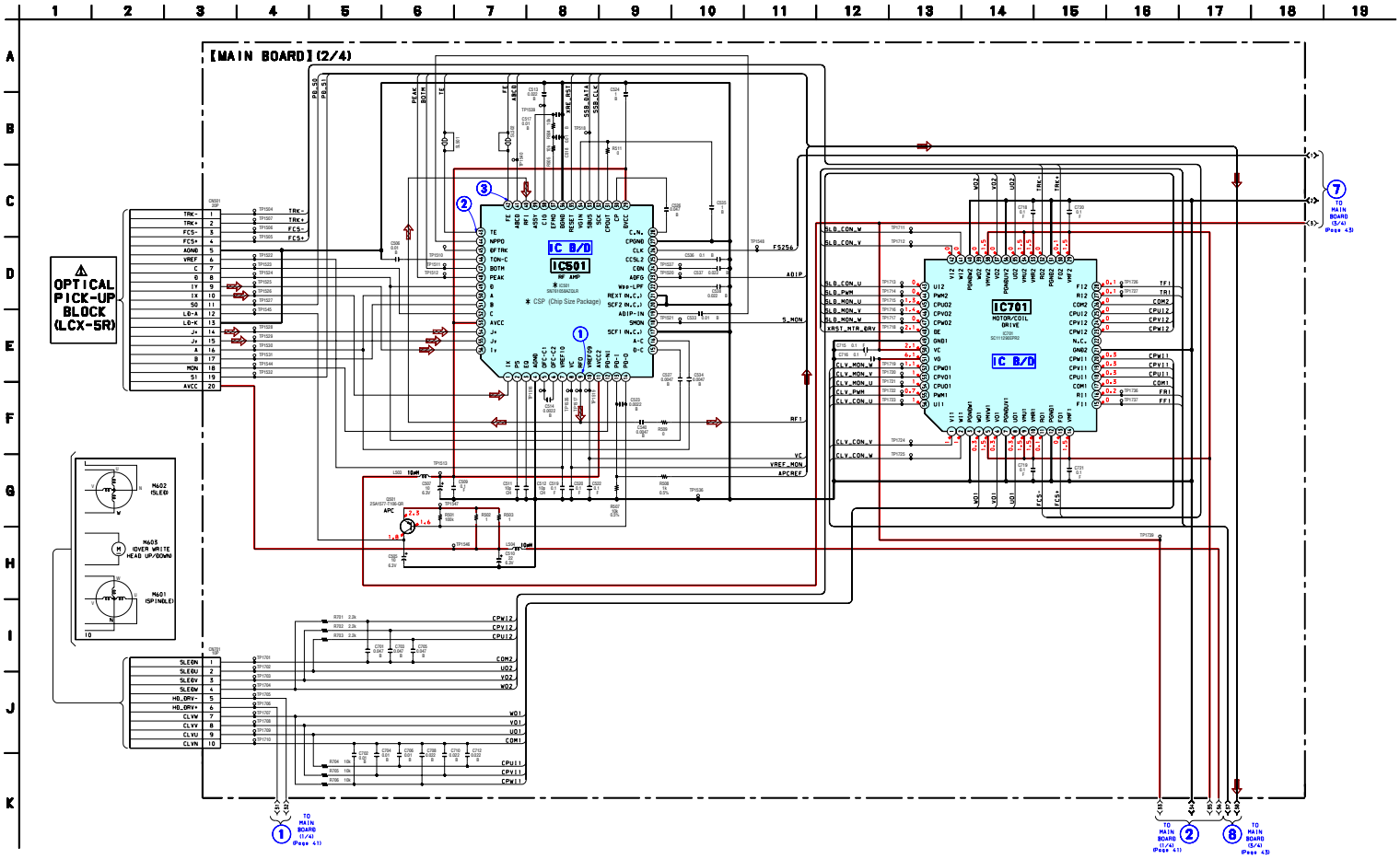

Downloaded from www.Manualslib.com manuals search engine

6-6. SCHEMATIC DIAGRAM – MAIN BOARD (3/4) – • See page 49 for IC PIN FUNCTION DESCRIPTION. • See page 37 for Waveforms.

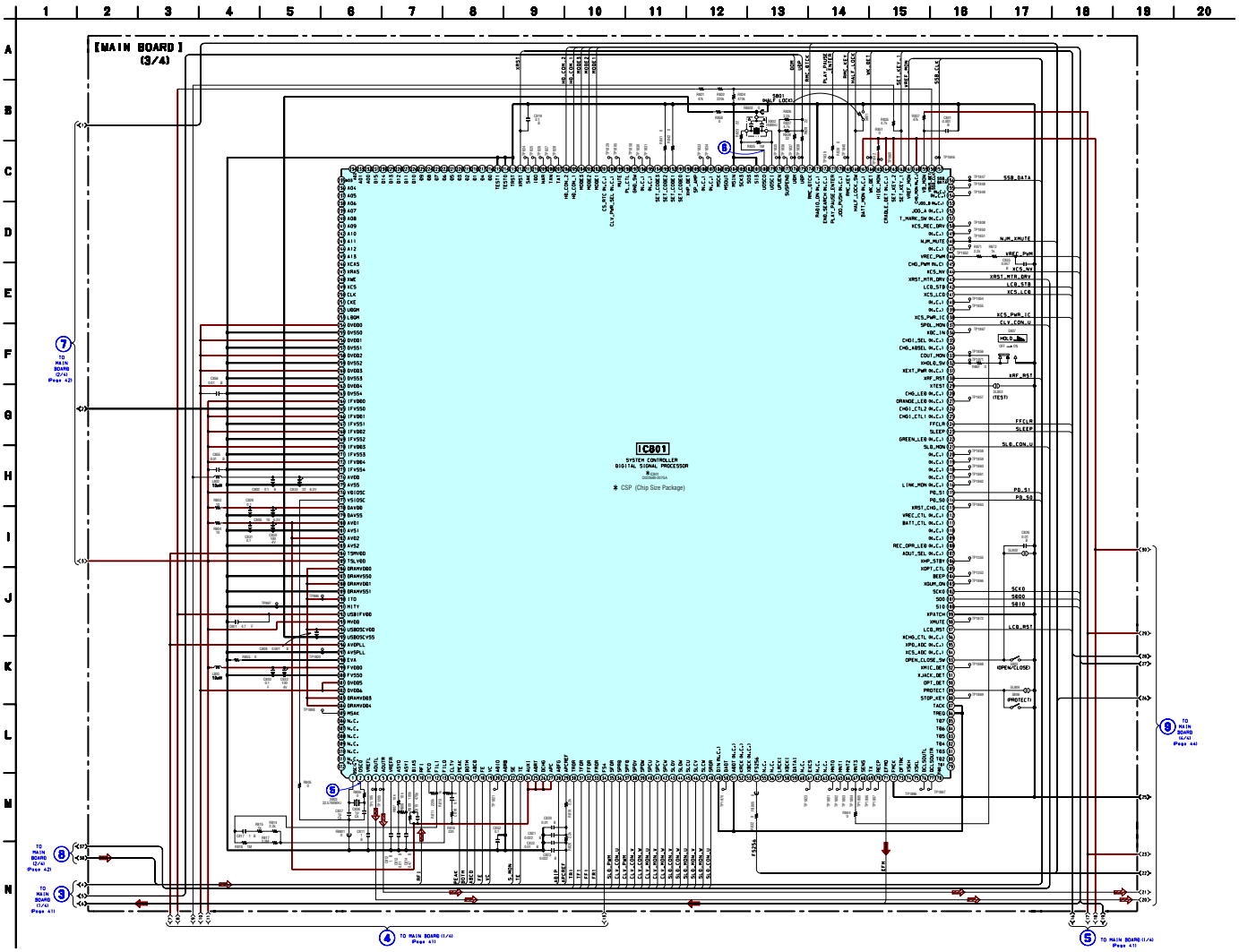

Downloaded from www.Manualslib.com manuals search engine

6-7. SCHEMATIC DIAGRAM – MAIN BOARD (4/4) – • See page 45 for IC Block Diagrams.

☆ When IC852 is damaged, replace the MAIN board.

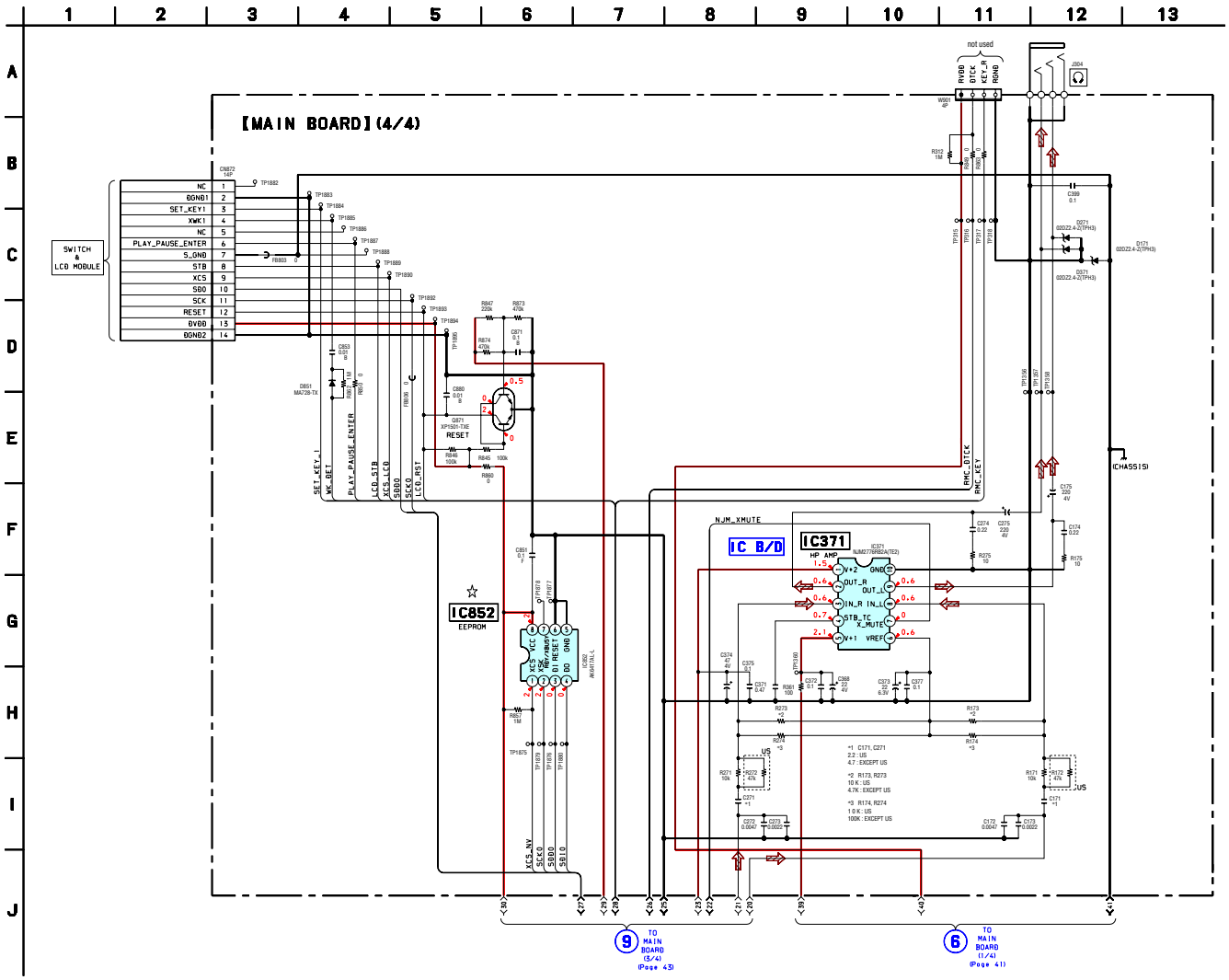

Downloaded from www.Manualslib.com manuals search engine

- **IC BLOCK DIAGRAMS**

IC371 NJM2776RB2A(TE2)

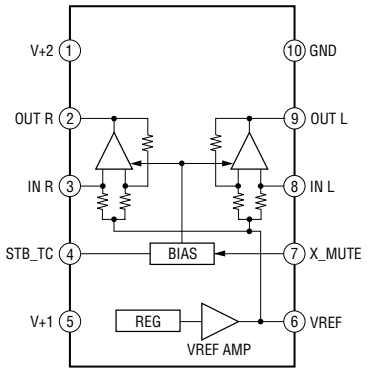

IC501 SN761058AZQLR

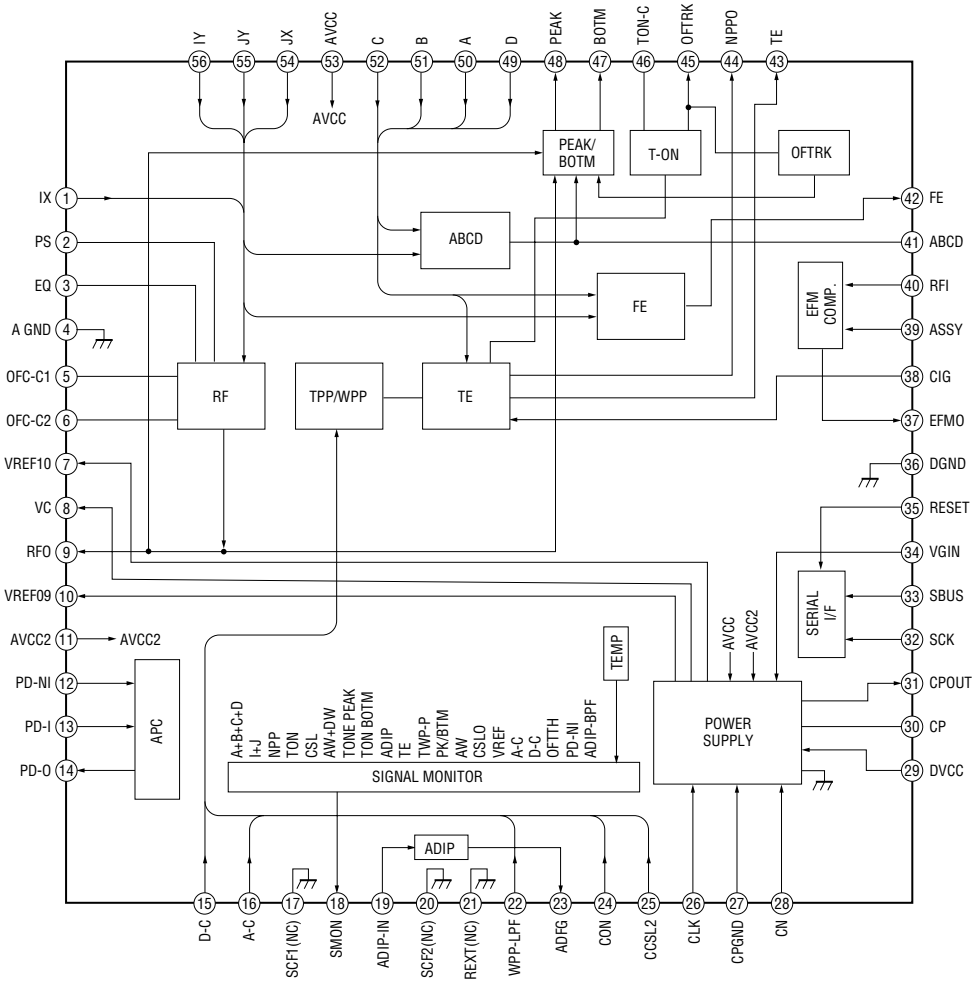

Downloaded from www.Manualslib.com manuals search engine

IC601 SC111292EPR2

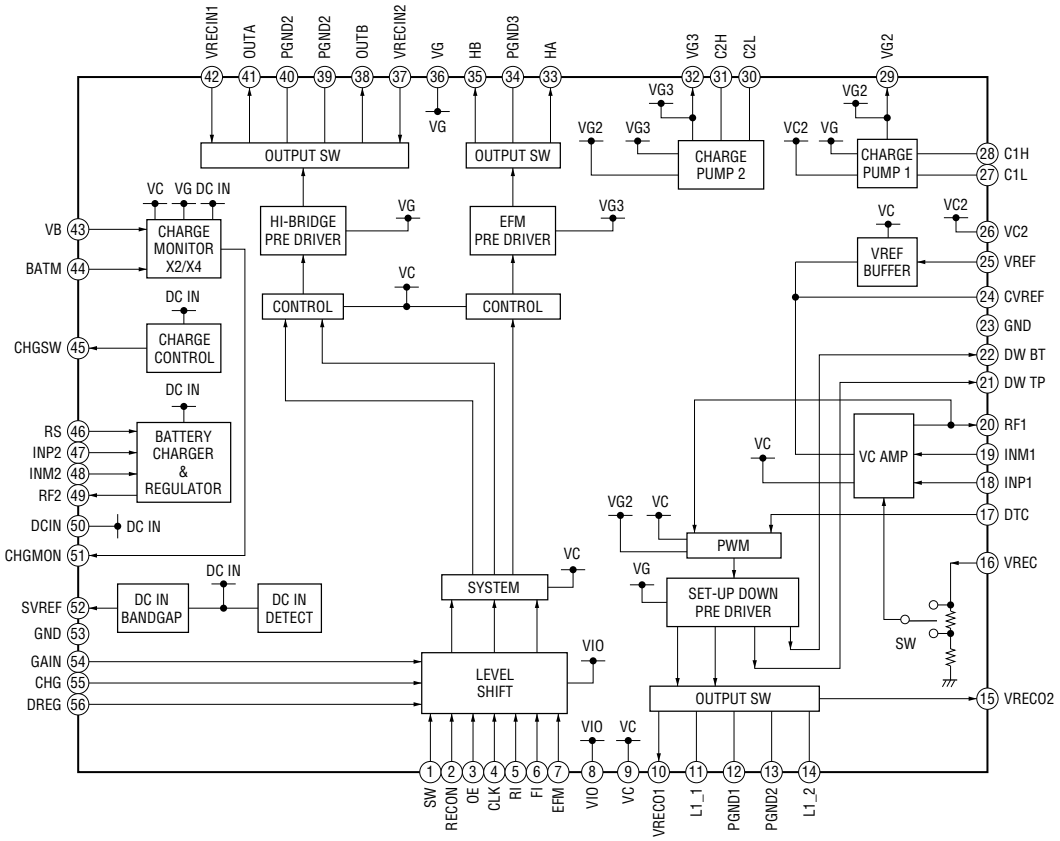

IC651 XC6367A331MR

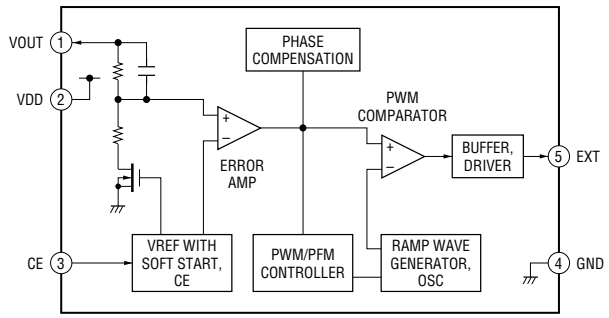

Downloaded from www.Manualslib.com manuals search engine

IC701 SC111290EPR2

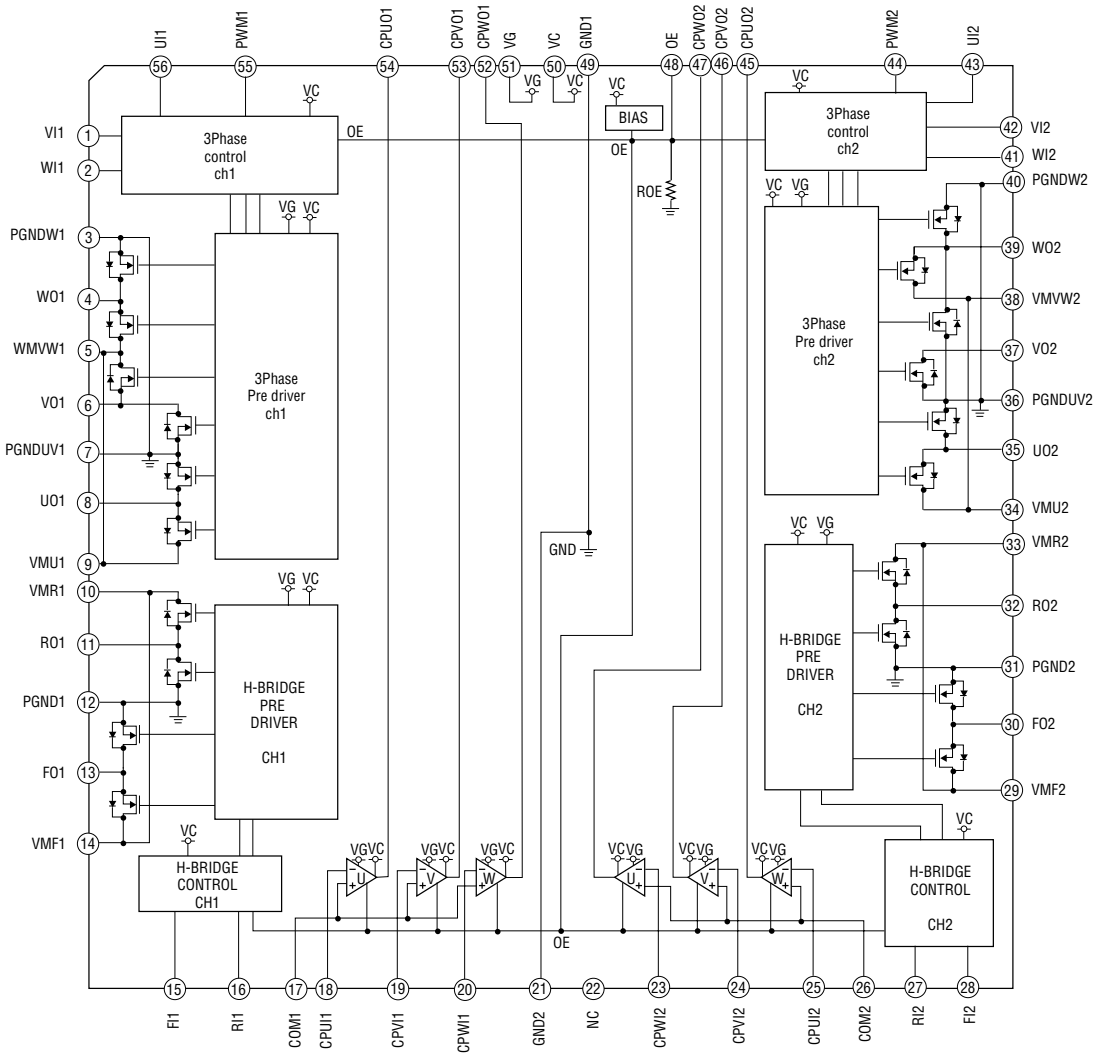

Downloaded from www.Manualslib.com manuals search engine

IC901 SC11291EPR2

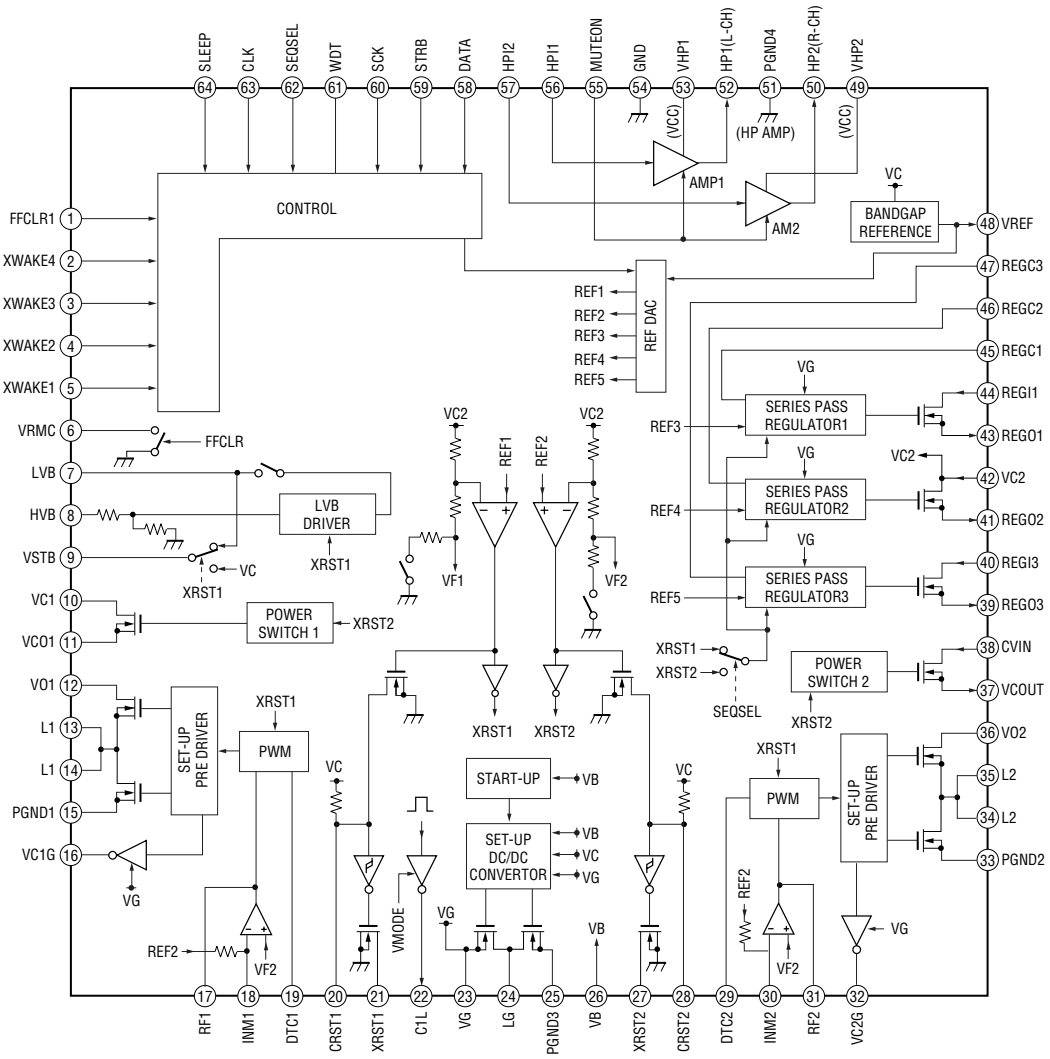

Downloaded from www.Manualslib.com manuals search engine

• IC PIN FUNCTION DESCRIPTION

• IC801 CXD2680-207GA (SYSTEM CONTROLLER, DIGITAL SIGNAL PROCESSOR)

Pin No.	Pin Name	I/O	Description
1	OSCI	I	Resonator connection terminal for the system clock (22.5792MHz)
2	OSCO	O	Resonator connection terminal for the system clock (22.5792MHz)
3	VREFL	O	Reference voltage terminal connected to the capacitor (for the built-in D/A converter L-CH)
4	AOUTL	O	Built-in D/A converter L-CH signal output
5	AOUTR	O	Built-in D/A converter R-CH signal output
6	VREFR	O	Reference voltage terminal connected to the capacitor (for the built-in D/A converter R-CH)
7	ASYO	O	Playback EFM duplex signal output
8	ASYI	I	Playback EFM comparator slice level input
9	BIAS	I	Bias current input terminal for the playback EFM comparator
10	RFI	I	Playback EFM RF signal input from the RF amplifier
11	PCO	O	Phase comparison output terminal for the playback EFM system master PLL
12	FILI	I	Filter input terminal for the playback EFM system master PLL
13	FILO	O	Filter output terminal for the playback EFM system master PLL
14	CLTV	I	Internal VCO control voltage input terminal for the playback EFM system master PLL
15	PEAK	I	Peak hold signal input of the light amount signal (RF/ABCD) from the RF amplifier
16	BOTM	I	Bottom hold signal input of the light amount signal (RF/ABCD) from the RF amplifier
17	ABCD	I	Light amount signal (ABCD) input from the RF amplifier
18	FE	I	Focus error signal input from the RF amplifier
19	VC	I	Middle point voltage input from the RF amplifier
20	ADIO	O	Monitor output terminal of A/D converter input signal Not used (open)
21	ADRB	I	The lower limit voltage of A/D converter input terminal (connected to the ground)
22	SE	I	Sled error signal input from the RF amplifier
23	TE	I	Tracking error signal input from the RF amplifier
24	AUX1	I	Auxiliary A/D input (fixed at "H" in this set)
25	ADRT	I	The upper limit voltage of A/D converter input terminal (fixed at "H" in this set)
26	DCHG	I	Connecting terminal with the analog power supply of low impedance (fixed at "H" in this set)
27	APC	I	Error signal input for the laser automatic power control (fixed at "H" in this set)
28	ADFG	I	ADIP duplex FM signal (22.05±1kHz) input from the RF amplifier
29	APCREF	O	Reference PWM signal output for the laser automatic power control to the RF amplifier
30	TRDR	O	Tracking servo drive PWM signal output (–) to the coil driver
31	TFDR	O	Tracking servo drive PWM signal output (+) to the coil driver
32	FFDR	O	Focus servo drive PWM signal output (+) to the coil driver
33	FRDR	O	Focus servo drive PWM signal output (–) to the coil driver
34	FS4	O	176.4kHz clock signal output
35	SFDR	O	Sled servo drive PWM signal output to the motor driver
36	SPRD	O	Spindle motor drive control signal output (U) to the motor driver
37	SPFD	O	Spindle servo drive PWM signal output to the motor driver
38	SPDV	O	Spindle motor drive control signal output (V) to the motor driver
39	SPDW	O	Spindle motor drive control signal output (W) to the motor driver
40	SPCU	I	Spindle motor drive comparison signal input (U) from the motor driver
41	SPCV	I	Spindle motor drive comparison signal input (V) from the motor driver
42	SPCW	I	Spindle motor drive comparison signal input (W) from the motor driver
43	SLDV	O	Sled motor drive control signal output (V) to the motor driver
44	SLDW	O	Sled motor drive control signal output (W) to the motor driver
45	SLCU	I	Sled motor drive comparison signal input (U) from the motor driver
46	SLCV	I	Sled motor drive comparison signal input (V) from the motor driver
47	SLCW	I	Sled motor drive comparison signal input (W) from the motor driver
48	SRDR	O	Sled motor drive control signal output (U) to the motor driver
49	DIN	I	Digital audio signal input (fixed at "L" in this set)
50	DADT	O	Audio data output terminal Not used (open)

Downloaded from www.Manualslib.com manuals search engine

Pin No.	Pin Name	I/O	Description
51	ADDT	I	Data input from the external A/D converter (fixed at "L" in this set)
52	KRCK	O	L/R sampling clock (44.1KHz) output to the external A/D converter Not used (open)
53	XBCK	O	Bit clock (2.8224MHz) output to the external A/D converter Not used (open)
54	FS256	O	11.2896MHz clock output
55	NC	O	Filter cutoff control signal output Not used (open)
56	NC	I	Clock input from the external VCO Not used (open)
57	LRCKI	I	Input terminal for the PCM data I/F/ ATRAC data I/F Not used (open)
58	XBCKI	I	Input terminal for the PCM data I/F/ ATRAC data I/F Not used (open)
59	DATAI	I	Input terminal for the PCM data I/F/ ATRAC data I/F Not used (open)
60	NC	—	Not used (open)
61	EXCS	O	Chip select signal output teminal for the external SDRAM Not used (open)
62, 63	NC	—	Not used (open)
64 to 66	MNT0 to 2	O	DSP monitor (0) to (2) output terminal Not used (open)
67	MNT3	O	DSP monitor (3) output terminal
68	SENS	O	DSP internal status (DSP SENS monitor) signal output terminal Not used (open)
69	TX	O	Record data output enable signal output Not used (open)
70	RECP	O	Laser power changeover signal output Not used (open)
71	EFMO	O	EFM encode data output for the record to the REC driver
72	FMCK	I	FMCK signal input Not used (connected to the ground)
73	OFTRK	I/O	Tracking signal input/output Not used (open)
74	XSKH	O	L circuit signal output Not used (open)
75	XSKL	O	K-SHOCK circuit signal output Not used (open)
76	DCLSOUTL	O	PWM modulator signal output for the D class headphone amplifier Not used (open)
77	DCLSOUTR	O	PWM modulator signal output for the D class headphone amplifier Not used (open)
78 to 85	TD0 to 7	—	TigerI/F data 0 to 7 terminal Not used (open)
86	TREQ	—	TigerI/F REQUEST terminal Not used (connected to the ground)
87	TACK	—	TigerI/F ACK terminal Not used (connected to the ground)
88	STOP_KEY	I	Stop key detection input terminal from the switch & liquid crystal display module Not used (open)
89	PROTECT	I	Detection signal input terminal of the record check claw from the protect detection switch "H": protect
90	OPT_DET	I	DIN plug detection signal input "H": DIN plug detect Not used (open)
91	XJACK_DET	I	LINE IN plug detection signal input "L": LINE or OPT plug detect Not used (open)
92	XMIC_DET	I	Microphone plug detection signal input "L": microphone plug detect Not used (open)
93	OPEN_CLOSE_SW	I	Open/close detection switch of the upper panel input terminal "L": when upper panel close
94	XCS_ADC	O	Chip select signal output to the A/D converter Not used (open)
95	XPD_ADC	O	Power supply control signal output to the A/D converter Not used (open)
96	XCHG_CTL	O	Charge ON/OFF control signal output Not used (open)
97	LCD_RST	O	Reset control signal output to the liquid crystal display module
98	XMUTE	O	Analog muting control signal output to the headphone amplifier "L": muting ON Not used (open)
99	XPATCH	I	Patch function detection terminal "L": patch function (fixed at "L" in this set)
100	SI0	I	Serial data input from the nonvolatile memory
101	SO0	O	Serial data output to the nonvolatile memory, liquid crystal display module and power control
102	SCK0	O	Serial clock output to the nonvolatile memory, liquid crystal display module and power control
103	XGUM_ON	I	Rechargeable battery detection switch input terminal "L": rechargeable battery in detect Not used (open)
104	BEEP	O	Beep sound control signal output to the headphone amplifier Not used (open)
105	XOPT_CTL	O	Power supply ON/OFF control signal output for the DIN PD drive Not used (open)
106	XHP_STBY	O	Power supply control signal output to the headphone amplifier Not used (open)
107	AOUT_SEL	O	HP/LINE changeover signal output to the headphone amplifier Not used (open)
108	REC_OPR_LED	O	LED ON/OFF control signal output for the REC display Not used (open)
109	NC	O	Power supply control signal output for the OP modulation Not used (open)
110	NC	O	Power supply control signal output for the OP laser Not used (open)

Downloaded from www.Manualslib.com manuals search engine

Pin No.	Pin Name	I/O	Description
111	BATT_CTL	O	Control signal output for the voltage step up circuit in the external battery case Not used (open)
112	VREC_CTL	O	VREC voltage control signal output Not used (open)
113	XRST_CHG_IC	O	Reset signal output to the battery charge control IC Not used (open)
114, 115	PD_S0, 1	O	PD IC mode changeover signal output to the optical pick up
116	LINK_MON	O	Linking area monitor signal output Not used (open)
117	NC	O	Plunger control signal output Not used (open)
118	NC	O	Ground changeover switch control signal output Not used (open)
119, 120	NC	O	Not used (open)
121	SLD_MON	I	Sled servo monitor signal input
122	GREEN_LED	O	Not used (open)
123	SLEEP	O	System sleep control signal output to the power control
124	FFCLR	O	Input latch output for the start switching to the power control
125	CHGI_CTL1	O	Charge current limit ON/OFF control signal output at the time of adaptor use Not used (open)
126	CHGI_CTL2	O	Charge current limit value changeover control signal output at the time of adaptor use Not used (open)
127	ORANGE_LED	O	Orange LED ON/OFF control signal output Not used (open)
128	CHG_LED	O	LED ON/OFF control signal output for CHG (charge display) Not used (open)
129	XTEST	I	Terminal for the test mode setting (normally open) “L”: test mode
130	XRF_RST	O	Reset control signal output to the RF amplifier “L”: reset
131	XEXT_PWR	I	External power supply (AC adaptor/charging stand) detection signal input Not used (open)
132	XHOLD_SW	I	HOLD switch input terminal “L”: hold ON
133	COUT_MON	I	Traverse count measurement monitor input
134	CHG_ADSEL	O	A/D terminal of the battery charge contro IC output selection signal output Not used (open)
135	CHGI_SEL	O	Charge/discharge changeover control signal output for the current sense amplifier Not used (open)
136	XDC_IN	I	DC plug detection signal input Not used (open)
137	SPDL_MON	I	Spindle servo monitor signal input
138	XCS_PWR_IC	O	Chip select signal output to the power control
139, 140	NC	O	Control signal output for the D class headphone amplifier Not used (open)
141	XCS_LCD	O	Chip select signal output to the liquid crystal display module
142	LCD_STB	O	Strobe signal output to the liquid crystal display module
143	XRST_MTR_DRV	O	Reset control signal output to the motor driver “L”: reset
144	XCS_NV	O	Chip select signal output to the nonvolatile memory
145	CHG_PWM	O	Output voltage control signal output to the battery charge control Not used (open)
146	VREC_PWM	O	PWM signal output for the power supply voltage control to the REC driver
147	NC	O	PWM signal output for the laser power supply voltage control to the power control Not used (open)
148	NJM_XMUTE	O	Muting control signal to the headphone amplifier (NJM type made by JRC)
149	NC	O	Power supply control signal output for the D class headphone amplifier Not used (open)
150	XCS_REC_DRV	O	Chip select signal output to the REC driver Not used (open)
151	T_MARK _SW	I	T MARK (track mark) switch input terminal “L”: track mark detection Not used (open)
152	JOG_A	I	Jog dial pulse input from the switch & liquid crystal display module Not used (open)
153	JOG_B	I	Jog dial pulse input from the switch & liquid crystal display module Not used (open)
154, 155	NC	O	Not used (open)
156	SSB_DATA	I/O	SSB data input/output with the RF amplifier
157	SSB_CLK	O	SSB clock output to the RF amplifier
158	VBUS_DET	I	USB power supply voltage detection terminal
159	VB_MON	I	Voltage monitor input terminal (A/D input) of the UNREG power supply
160	CHG_MON	I	Not used (fixed at “H”)
161	VREF_MON	I	Reference voltage monitor input (A/D input) from the RF amplifier
162	SET_KEY_1	I	Key input (A/D input) from the switch & liquid crystal display module
163	SET_KEY_2	I	Key input (A/D input) from the switch & liquid crystal display module Not used (fixed at “H”)
164	CRADLE_DET	I	USB cradle or battery case detection signal input Not used (fixed at “H”)

Downloaded from www.Manualslib.com manuals search engine

Pin No.	Pin Name	I/O	Description
165	HIDC_MON	I	HIGH DC voltage monitor input (A/D input) Not used (fixed at “H”)
166	WK_DET	I	Set key WAKE detection signal input
167	BATT_MON	I	External battery voltage monitor input Not used (fixed at “H”)
168	HALF_LOCK_SW	I	Open button detection switch input (A/D input) “L” : the open button is pressed
16 9	RMC_KEY	I	Key input (A/D input) from the remote commander
170	JOG_PUSH	I	Jog dial push detection signal input Not used (open)
171	PLAY_PAUSE_ENTER	I	PLAY_PAUSE_ENTER key input (A/D input)
172	END_SEARCH	I	END SEARCH key input (A/D input) Not used (open)
173	RADIO_ON	I	RADIO ON detection signal input Not used (connected to the ground)
174	RMC_DTCK	I/O	TSB master data clock input/output or SSB data input/output
175	UDP	I/O	USB data (+) input terminal
176	UDM	I/O	USB data (-) input terminal
177	SUSPEND	O	USB suspend signal output Not used (open)
178	UPUEN	O	USB pull-up resistor connection control output terminal
179	UOSCI	I	Resonator (48MHz) connection terminal for the USB oscillation circuit
180	UOSCO	O	Resonator (48MHz) connection terminal for the USB oscillation circuit
181	SI3	I	Not used (connected to the ground)
182	SO3	O	Not used (open)
183	SCK3	I/O	Not used (open)
184	MSIN	I	Not used (connected to the ground)
185	MSOUT	O	Not used (open)
186	MSCK	I/O	Not used (open)
187, 188	NC	O	Not used (open)
189	SP_AMP	O	Built-in speaker control signal output “H”: activate Not used (open)
190	XHP_DET	I	Headphone jack detection signal input Not used (open)
191	SET_CODE0	I	Input terminal for the set (open in this set)
192	SET_CODE1	I	Input terminal for the set (fixed at “L” in this set)
193	SET_CODE2	I	Input terminal for the set (fixed at “L” in this set)
194	SET_CODE3	I	Input terminal for the set (open in this set)
195, 196	NC	O	Not used (open)
197	GND_SW	I	Not used (open)
198	PL_CTL	O	Not used (open)
199	MUTE	O	Analog muting control signal output to the headphone amplifier “H”: muting ON Not used (open)
200	CLV_PWR_SEL	O	CLV motor power supply selection control signal output Not used (open)
201	CS_RTC	O	Chip select signal output to the real time clock Not used (open)
202 to 204	MODE1 to 3	O	Power supply control signal output for the over write head to the REC driver
205, 206	HD_CON_1, 2	O	Over write head control signal output to the REC driver
207	TAT	I	Not used (open)
208	TAN	I	Not used (open)
209	NAR	I	Not used (open)
210	IDO	I	Not used (open)
211	SAK	O	Not used (open)
212	XRST	I	System reset signal input from the power control “L”: reset
213	TRST	I	Terminal for the test mode setting (normally fixed at “L”)
214, 215	TEST0, 1	I	Input terminal for the main test (normally fixed at “L”)
216 to 231	D0 to 15	—	DRAM data0 to 15 terminal Not used (open)
232 to 245	A00 to 13	—	DRAM address0 to 13 terminal Not used (open)
246	XCAS	—	DRAM CAS terminal Not used (open)
247	XRAS	—	DRAM RAS terminal Not used (open)
248	XWE	—	DRAM write enable terminal Not used (open)

Downloaded from www.Manualslib.com manuals search engine

Pin No.	Pin Name	I/O	Description
249	XCS	—	DRAM chip select terminal Not used (open)
250	CLK	—	DRAM clock terminal Not used (open)
251	CKE	—	DRAM clock enable terminal Not used (open)
252	UDQM	—	DRAM byte mask terminal Not used (open)
253	LDQM	—	DRAM byte mask terminal Not used (open)
254	DVDD0	—	Power supply terminal
255	DVSS0	—	Ground terminal
256	DVDD1	—	Power supply terminal
257	DVSS1	—	Ground terminal
258	DVDD2	—	Power supply terminal
259	DVSS2	—	Ground terminal
260	DVDD3	—	Power supply terminal
261	DVSS3	—	Ground terminal
262	DVDD4	—	Power supply terminal
263	DVSS4	—	Ground terminal
264	IFVDD0	—	Power supply terminal (for the microcomputer I/F block)
265	IFVSS0	—	Ground terminal (for the microcomputer I/F block)
266	IFVDD1	—	Power supply terminal (for the microcomputer I/F block)
267	IFVSS1	—	Ground terminal (for the microcomputer I/F block)
268	IFVDD2	—	Power supply terminal (for the microcomputer I/F block)
269	IFVSS2	—	Ground terminal (for the microcomputer I/F block)
270	IFVDD3	—	Power supply terminal (for the microcomputer I/F block)
271	IFVSS3	—	Ground terminal (for the microcomputer I/F block)
272	IFVDD4	—	Power supply terminal (for the microcomputer I/F block)
273	IFVSS4	—	Ground terminal (for the microcomputer I/F block)
274	AVDD	—	Power supply terminal (for the microcomputer analog)
275	AVSS	—	Ground terminal (for the microcomputer analog)
276	VDIOSC	—	Power supply terminal (for the OSC cell)
277	VSIOSC	—	Ground terminal (for the OSC cell)
278	DAVDD	—	Power supply terminal (for the built-in D/A converter)
279	DAVSS	—	Ground terminal (for the built-in D/A converter)
280	AVD1	—	Power supply terminal (for the DSP asymmetry system analog)
281	AVS1	—	Ground terminal (for the DSP asymmetry system analog)
282	AVD2	—	Power supply terminal (for the DSP servo system analog)
283	AVS2	—	Ground terminal (for the DSP servo system analog)
284	TSMVDD	—	Power supply terminal (for the TSB master communication)
285	TSLVDD	—	Power supply terminal (for the TSB slave I/F)
286	DRAMVDD0	—	Power supply terminal (for DRAM)
287	DRAMVSS0	—	Ground terminal (for DRAM)
288	DRAMVDD1	—	Power supply terminal (for DRAM)
289	DRAMVSS1	—	Ground terminal (for DRAM)
290	ITO	—	Power supply terminal (for writing the flash memory)
291	MITY	—	Ground terminal (for writing the flash memory)
292	USBIFVDD	—	Power supply terminal (for USB I/F)
293	MVDD	—	Power supply terminal (for the microcomputer I/F block)
294	USBOSCVDD	—	Power supply terminal (for the USB oscillation circuit)
295	USBOSCVSS	—	Ground terminal (for the USB oscillation circuit)
296	AVDPLL	—	Power supply terminal (for PLL)
297	AVSPLL	—	Ground terminal (for PLL)
298	EVA	I	EVA terminal (fixed at “L” in this set)

Downloaded from www.Manualslib.com manuals search engine

Pin No.	Pin Name	I/O	Description
299	FVDD0	—	Power supply terminal (for the built-in flash memory)
300	FVSS0	—	Ground terminal (for the built-in flash memory)
301, 302	DVDD5, 6	—	Power supply terminal
303, 304	DRAMVDD3, 4	—	Power supply terminal (for DRAM)
305	MSAK	—	Not used (open)
306 to 312	NC	—	Not used (open)

Downloaded from www.Manualslib.com manuals search engine

SECTION 7
EXPLODED VIEWS

NOTE:
- -XX, -X mean standardized parts, so they may have some differences from the original one.
- Items marked "*" are not stocked since they are seldom required for routine service. Some delay should be anticipated when ordering these items.
- The mechanical parts with no reference number in the exploded views are not supplied.
- Color Indication of Appearance Parts
  Example:
  KNOB, BALANCE (WHITE) . . . (RED)
  ↑ Parts Color ↑ Cabinet's Color
- Abbreviation
  CND : Canadian model
  MX : Mexican model

The components identified by mark ⚠ or dotted line with mark ⚠ are critical for safety. Replace only with part number specified.

Les composants identifiés par une marque ⚠ sont critiques pour la sécurité. Ne les remplacer que par une pièce portant le numéro spécifié.

7-1. CASE SECTION

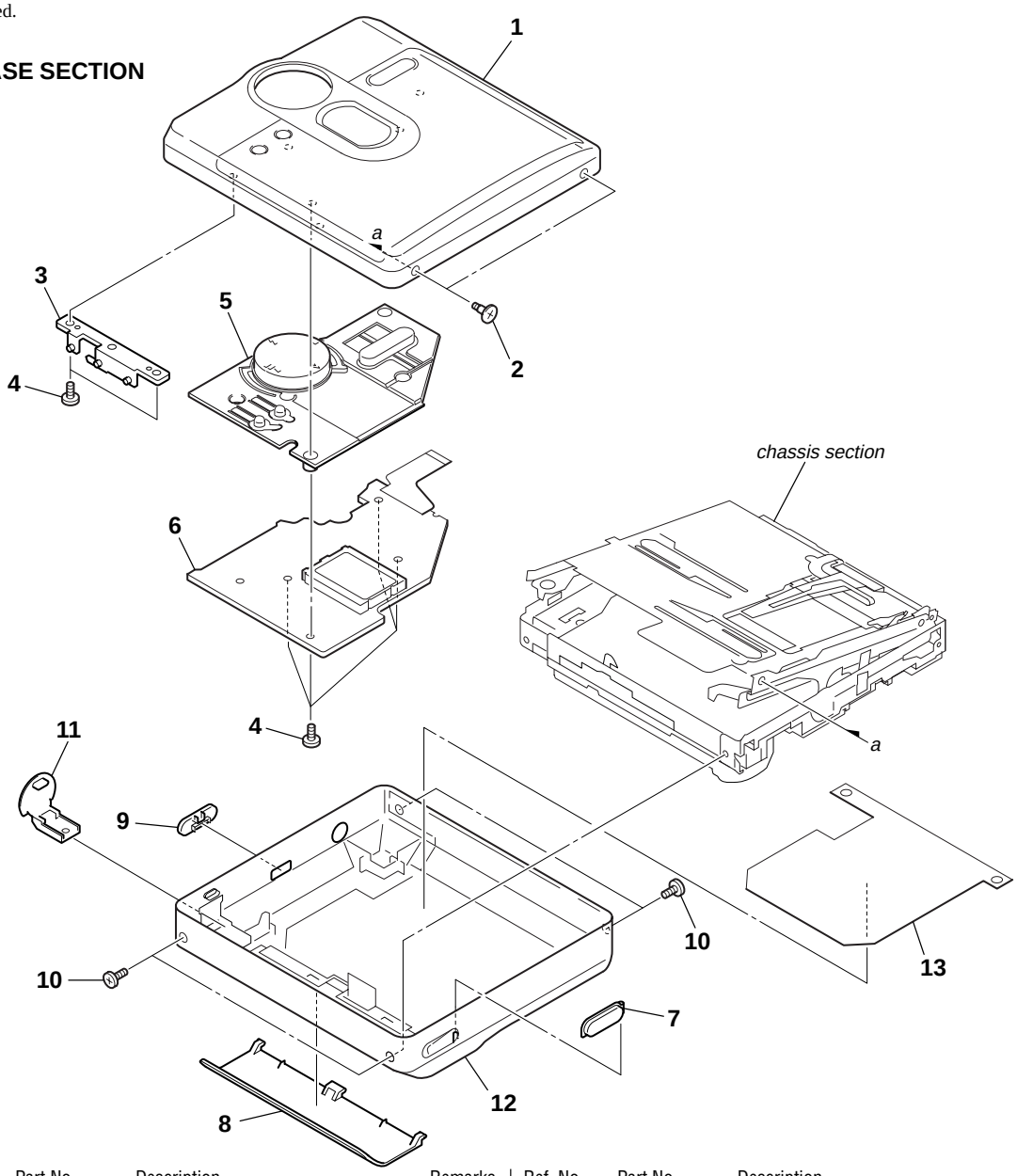

Ref. No.	Part No.	Description	Remarks
1	X-2021-168-1	CASE UPPER SUB ASSY (SVX) (L)	(LEFT HAND) (US)
1	X-2021-169-1	CASE UPPER SUB ASSY (SVX) (BLUE) (CND)	
1	X-2021-170-1	CASE UPPER SUB ASSY (SVX) (RED) (CND)	
1	X-2021-781-1	CASE UPPER SUB ASSY (SVX) (H)	(RIGHT HAND) (US)
1	X-2021-783-1	CASE UPPER SUB ASSY (SVX) (MX)	
2	3-241-529-01	SCREW, STEP	
3	3-237-097-02	LOCKER, OPEN	
4	3-254-014-01	SCREW	
5	3-244-560-11	BUTTON (CONTROL) (RIGHT HAND)	
5	3-261-825-01	BUTTON CONTROL (LEFT HAND) (US)	
6	1-804-834-11	LCD MODULE	

Ref. No.	Part No.	Description	Remarks
7	3-237-099-01	BUTTON (OPEN)	
8	3-225-636-71	LID, BATTERY CASE	
9	3-237-092-51	KNOB (HOLD)	
10	3-234-449-19	SCREW (M1.4)	
11	3-246-248-11	CAP (USB)	
12	X-2021-171-1	CASE LOWER SUB ASSY (SVX) (LEFT HAND)	(US)
12	X-2021-172-1	CASE LOWER SUB ASSY (SVX) (CND)	
12	X-2021-782-1	CASE LOWER SUB ASSY (SVX) (RIGHT HAND)	(US)
12	X-2021-784-1	CASE LOWER SUB ASSY (SVX) (MX)	
13	3-252-304-01	PAPER (CASE LOWER), GROUND	

Downloaded from www.Manualslib.com manuals search engine

7-2. CHASSIS SECTION

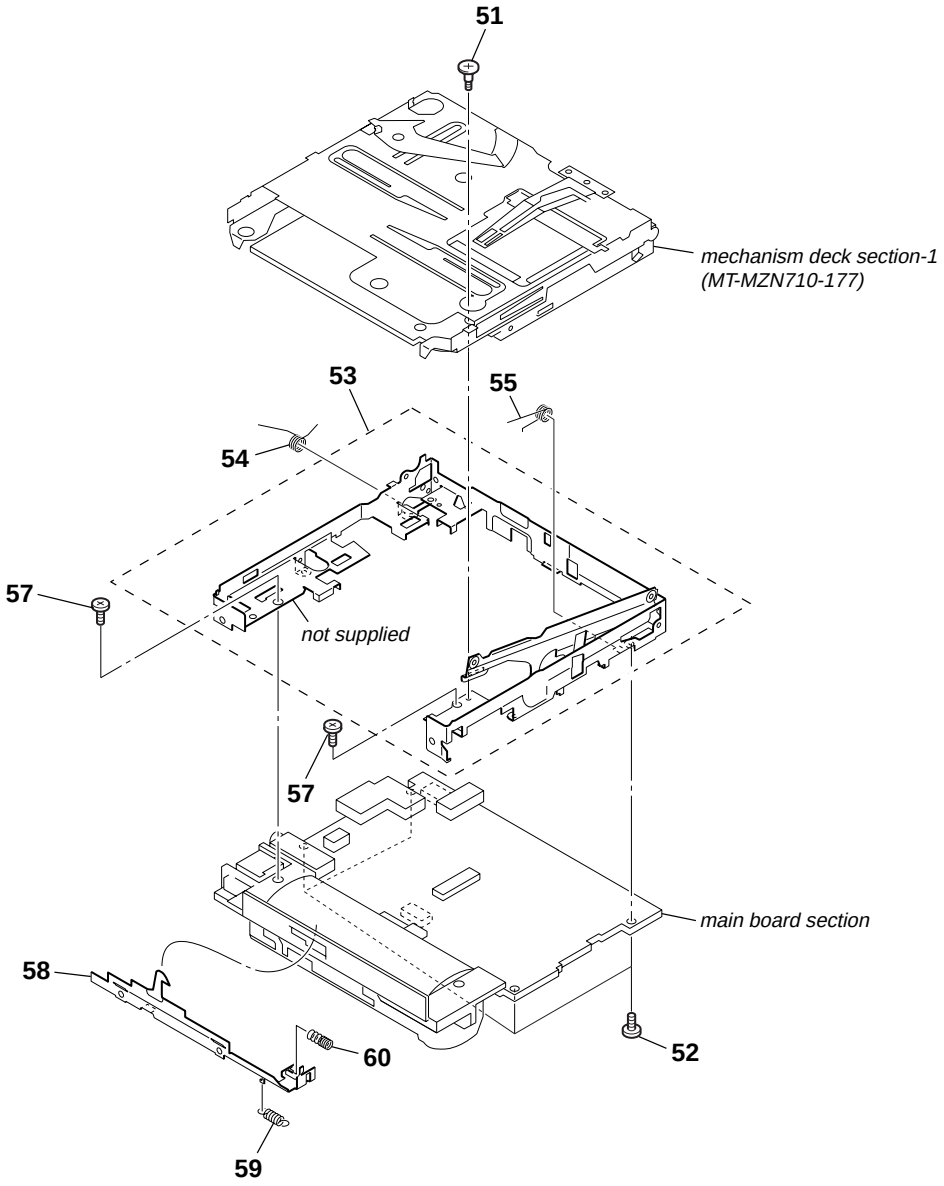

Ref. No.	Part No.	Description	Remarks	Ref. No.	Part No.	Description	Remarks
51	3-237-072-02	SCREW (MD), STEP		57	3-318-382-91	SCREW (1.7X2.5), TAPPING	
52	3-238-876-07	SCREW (M1.4), TOOTHED LOCK		58	3-246-245-02	SLIDER, OPEN	
53	X-3382-642-3	CHASSIS (5207) ASSY, SET		59	3-237-082-01	SPRING (LOCK), TENSION	
54	3-249-532-01	SPRING (POP UP-L), TORSION		60	3-237-081-01	SPRING (LIMITTER), COMPRESSION	
55	3-237-083-01	SPRING (POP UP-R), TORSION					

Downloaded from www.Manualslib.com manuals search engine

7-3. MAIN BOARD SECTION

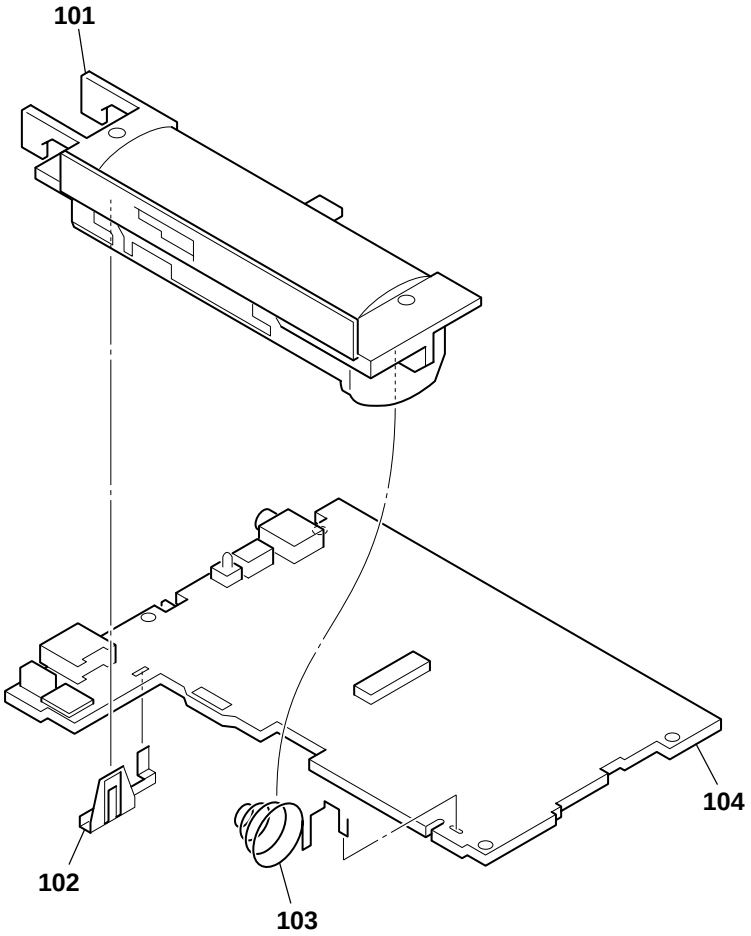

Ref. No.	Part No.	Description	Remarks	Ref. No.	Part No.	Description	Remarks
101	3-246-247-04	CASE, BATTERY		103	3-237-074-11	TERMINAL (-), BATTERY	
102	3-237-073-01	TERMINAL BOARD (+), BATTERY		104		MAIN BOARD, COMPLETE	

Downloaded from www.Manualslib.com manuals search engine

7-4. MECHANISM DECK SECTION-1 (MT-MZN710-177)

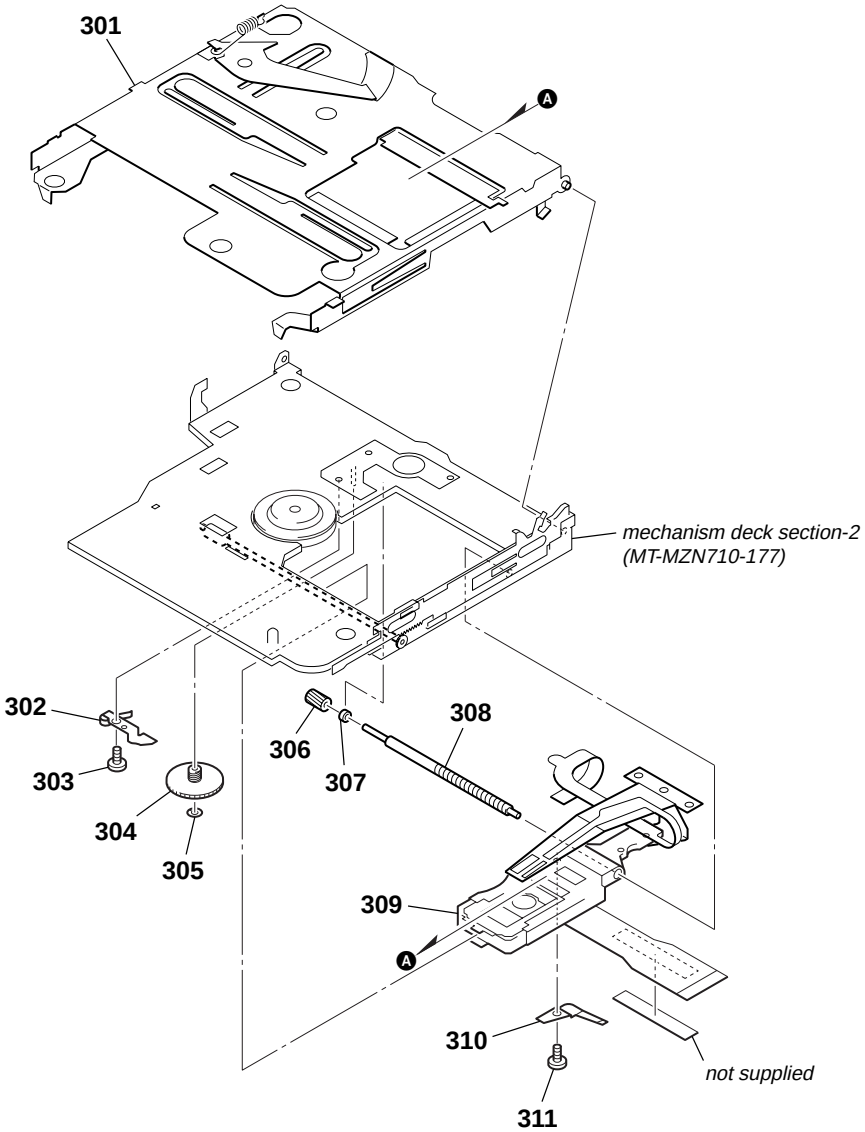

Ref. No.	Part No.	Description	Remarks
301	X-3381-219-4	HOLDER ASSY	
302	3-224-779-02	SPRING, THRUST DETENT	
303	3-225-996-01	SCREW (M1.4)(EG),PRECISION PAN	
304	3-244-823-01	GEAR (SA)	
305	3-338-645-31	WASHER (0.8-2.5)	
306	4-222-208-01	GEAR (SB)	
307	3-043-237-02	BEARING (N)	
308	4-222-203-02	SCREW, LEAD	
⚠309	X-3382-953-1	SERVICE ASSY, OP (LCX-5R)	
310	3-049-336-03	SPRING (S), RACK	
311	3-225-996-06	SCREW (M1.4)(EG),PRECISION PAN	

The components identified by mark ⚠ or dotted line with mark ⚠ are critical for safety. Replace only with part number specified.	Les composants identifiés par une marque ⚠ sont critiques pour la sécurité. Ne les remplacer que par une pièce portant le numéro spécifié.

Downloaded from www.Manualslib.com manuals search engine

7-5. MECHANISM DECK SECTION-2 (MT-MZN710-177)

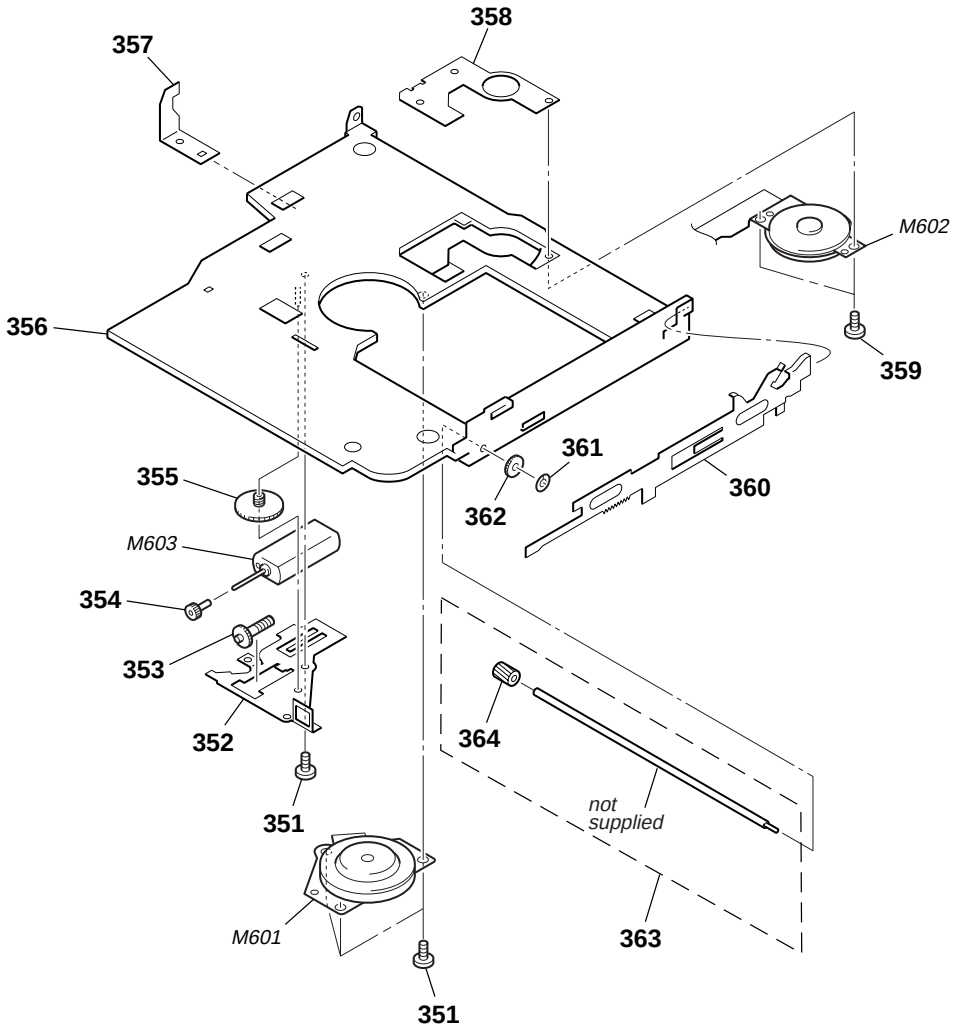

Ref. No.	Part No.	Description	Remarks
351	3-225-278-12	SCREW, TAPPING	
352	3-235-838-02	COVER, MOTOR	
353	3-235-836-01	GEAR (HB)	
354	3-222-544-01	GEAR (HA)	
355	3-235-835-01	GEAR (HC)	
356	3-235-834-11	CHASSIS	
357	3-235-830-02	PLATE, RATCHET	
358	X-3379-529-4	BASE ASSY, MOTOR	
359	3-225-996-07	SCREW (M1.4)(EG),PRECISION PAN	
360	3-235-839-02	LEVER (RACK)	
361	3-338-645-31	WASHER (0.8-2.5)	
362	4-222-222-01	GEAR (RACK)	
363	A-3174-089-A	SHAFT BLOCK ASSY, SUB	
364	4-222-218-02	GEAR (HD)	
M601	8-835-744-21	MOTOR, DC SSM18B/C-NP (SPINDLE)	
M602	1-763-727-11	MOTOR, DC (SLED)	
M603	1-763-400-21	MOTOR, DC (OVER WRITE HEAD UP/DOWN)	

Downloaded from www.Manualslib.com manuals search engine

MAIN

SECTION 8
ELECTRICAL PARTS LIST

NOTE:
- Due to standardization, replacements in the parts list may be different from the parts specified in the diagrams or the components used on the set.
- -XX, -X mean standardized parts, so they may have some difference from the original one.
- Items marked "*" are not stocked since they are seldom required for routine service. Some delay should be anticipated when ordering these items.
- CAPACITORS:
  uF: µF
- RESISTORS
  All resistors are in ohms.
  METAL: metal-film resistor
  METAL OXIDE: Metal Oxide-film resistor
  F: nonflammable
- COILS
  uH: µH
- SEMICONDUCTORS
  In each case, u: µ, for example:
  uA...: µA... , uPA... , µPA... ,
  uPB... , µPB... , uPC... , µPC... ,
  uPD..., µPD...

When indicating parts by reference number, please include the board name.

The components identified by mark ⚠ or dotted line with mark ⚠ are critical for safety. Replace only with part number specified.

Les composants identifiés par une marque ⚠ sont critiques pour la sécurité. Ne les remplacer que par une pièce portant le numéro spécifié.

- Abbreviation
  CND : Canadian model
  MX : Mexican model

Ref. No.	Part No.	Description				Remarks
		MAIN BOARD, COMPLETE				
		**********				
		< CAPACITOR >				
C171	1-125-889-91	CERAMIC CHIP	2.2uF	10%	10V	(US)
C171	1-127-760-11	CERAMIC CHIP	4.7uF	10%	6.3V	(EXCEPT US)
C172	1-164-941-11	CERAMIC CHIP	0.0047uF	10.00%	16V	
C173	1-164-939-11	CERAMIC CHIP	0.0022uF	10.00%	50V	
C174	1-115-467-11	CERAMIC CHIP	0.22uF	10.00%	10V	
C175	1-126-246-11	ELECT CHIP	220uF	20%	4V	
C271	1-125-889-91	CERAMIC CHIP	2.2uF	10%	10V	(US)
C271	1-127-760-11	CERAMIC CHIP	4.7uF	10%	6.3V	(EXCEPT US)
C272	1-164-941-11	CERAMIC CHIP	0.0047uF	10.00%	16V	
C273	1-164-939-11	CERAMIC CHIP	0.0022uF	10.00%	50V	
C274	1-115-467-11	CERAMIC CHIP	0.22uF	10.00%	10V	
C275	1-126-246-11	ELECT CHIP	220uF	20%	4V	
* C339	1-107-820-11	CERAMIC CHIP	0.1uF		16V	
C368	1-110-442-11	ELECT CHIP	22uF	20%	4V	
C371	1-117-863-11	CERAMIC CHIP	0.47uF	10.00%	6.3V	
* C372	1-107-820-11	CERAMIC CHIP	0.1uF		16V	
C373	1-137-739-91	TANTAL. CHIP	22uF	20%	6.3V	
C374	1-126-208-21	ELECT CHIP	47uF	20.00%	4V	
* C375	1-107-820-11	CERAMIC CHIP	0.1uF		16V	
* C377	1-107-820-11	CERAMIC CHIP	0.1uF		16V	
C505	1-165-851-91	TANTAL. CHIP	10uF	20%	6.3V	
C506	1-164-943-11	CERAMIC CHIP	0.01uF	10.00%	16V	
C507	1-135-259-11	TANTAL. CHIP	10uF	20.00%	6.3V	
* C509	1-107-820-11	CERAMIC CHIP	0.1uF		16V	
C510	1-119-750-11	TANTAL. CHIP	22uF	20.00%	6.3V	
C511	1-164-850-11	CERAMIC CHIP	10PF	0.50PF	50V	
C512	1-164-850-11	CERAMIC CHIP	10PF	0.50PF	50V	
C513	1-107-819-11	CERAMIC CHIP	0.022uF	10.00%	16V	
C514	1-164-939-11	CERAMIC CHIP	0.0022uF	10.00%	50V	
C517	1-164-943-11	CERAMIC CHIP	0.01uF	10.00%	16V	
C518	1-164-943-11	CERAMIC CHIP	0.01uF	10.00%	16V	
* C519	1-107-820-11	CERAMIC CHIP	0.1uF		16V	
* C520	1-107-820-11	CERAMIC CHIP	0.1uF		16V	
* C522	1-107-820-11	CERAMIC CHIP	0.1uF		16V	
C523	1-164-939-11	CERAMIC CHIP	0.0022uF	10.00%	50V	
C524	1-125-837-91	CERAMIC CHIP	1uF	10%	6.3V	
C526	1-119-923-11	CERAMIC CHIP	0.047uF	10.00%	10V	
C527	1-164-941-11	CERAMIC CHIP	0.0047uF	10.00%	16V	
C533	1-164-943-11	CERAMIC CHIP	0.01uF	10.00%	16V	
C534	1-164-941-11	CERAMIC CHIP	0.0047uF	10.00%	16V	
C535	1-125-837-91	CERAMIC CHIP	1uF	10%	6.3V	
C536	1-125-777-11	CERAMIC CHIP	0.1uF	10.00%	10V	
C537	1-107-819-11	CERAMIC CHIP	0.022uF	10.00%	16V	
C538	1-107-819-11	CERAMIC CHIP	0.022uF	10.00%	16V	
C540	1-164-941-11	CERAMIC CHIP	0.0047uF	10.00%	16V	
C613	1-135-259-11	TANTAL. CHIP	10uF	20.00%	6.3V	
C614	1-135-259-11	TANTAL. CHIP	10uF	20.00%	6.3V	
C615	1-125-777-11	CERAMIC CHIP	0.1uF	10.00%	10V	
C616	1-125-777-11	CERAMIC CHIP	0.1uF	10.00%	10V	
C617	1-125-777-11	CERAMIC CHIP	0.1uF	10.00%	10V	
C618	1-125-777-11	CERAMIC CHIP	0.1uF	10.00%	10V	
C621	1-164-943-11	CERAMIC CHIP	0.01uF	10.00%	16V	
C622	1-125-777-11	CERAMIC CHIP	0.1uF	10.00%	10V	
C623	1-164-943-11	CERAMIC CHIP	0.01uF	10.00%	16V	
C624	1-164-874-11	CERAMIC CHIP	100PF	5.00%	50V	
C626	1-135-259-11	TANTAL. CHIP	10uF	20.00%	6.3V	
C627	1-131-862-91	TANTAL. CHIP	47uF	20%	4V	
C628	1-165-851-91	TANTAL. CHIP	10uF	20%	6.3V	
C630	1-125-777-11	CERAMIC CHIP	0.1uF	10.00%	10V	
C631	1-131-862-91	TANTAL. CHIP	47uF	20%	4V	
C632	1-137-760-91	CAP-CHIP	100PF	5%	100V	
C651	1-162-970-11	CERAMIC CHIP	0.01uF	10%	25V	
C658	1-137-739-91	TANTAL. CHIP	22uF	20%	6.3V	
C659	1-164-937-11	CERAMIC CHIP	0.001uF	10.00%	50V	
C660	1-164-939-11	CERAMIC CHIP	0.0022uF	10.00%	50V	
C661	1-137-934-91	TANTAL. CHIP	47uF	20%	10V	
C671	1-125-777-11	CERAMIC CHIP	0.1uF	10.00%	10V	
C673	1-125-777-11	CERAMIC CHIP	0.1uF	10.00%	10V	
C701	1-119-923-11	CERAMIC CHIP	0.047uF	10.00%	10V	
C702	1-164-943-11	CERAMIC CHIP	0.01uF	10.00%	16V	
C703	1-119-923-11	CERAMIC CHIP	0.047uF	10.00%	10V	
C704	1-164-943-11	CERAMIC CHIP	0.01uF	10.00%	16V	
C705	1-119-923-11	CERAMIC CHIP	0.047uF	10.00%	10V	
C706	1-164-943-11	CERAMIC CHIP	0.01uF	10.00%	16V	
C708	1-107-819-11	CERAMIC CHIP	0.022uF	10.00%	16V	
C710	1-107-819-11	CERAMIC CHIP	0.022uF	10.00%	16V	
C712	1-107-819-11	CERAMIC CHIP	0.022uF	10.00%	16V	
* C715	1-107-820-11	CERAMIC CHIP	0.1uF		16V	
* C716	1-107-820-11	CERAMIC CHIP	0.1uF		16V	
* C718	1-107-820-11	CERAMIC CHIP	0.1uF		16V	
* C719	1-107-820-11	CERAMIC CHIP	0.1uF		16V	
* C720	1-107-820-11	CERAMIC CHIP	0.1uF		16V	
* C721	1-107-820-11	CERAMIC CHIP	0.1uF		16V	
C801	1-117-720-11	CERAMIC CHIP	4.7uF		10V	
C802	1-125-777-11	CERAMIC CHIP	0.1uF	10.00%	10V	
* C803	1-107-820-11	CERAMIC CHIP	0.1uF		16V	
C805	1-165-851-91	TANTAL. CHIP	10uF	20%	6.3V	

Downloaded from www.Manualslib.com manuals search engine

Ref. No.	Part No.	Description			Remarks
C808	1-164-937-11	CERAMIC CHIP	0.001uF	10.00%	50V
C811	1-125-837-91	CERAMIC CHIP	1uF	10%	6.3V
C812	1-125-837-91	CERAMIC CHIP	1uF	10%	6.3V
C813	1-164-943-11	CERAMIC CHIP	0.01uF	10.00%	16V
C814	1-125-891-11	CERAMIC CHIP	0.47uF	10.00%	10V
C815	1-164-935-11	CERAMIC CHIP	470PF	10.00%	50V
C817	1-125-837-91	CERAMIC CHIP	1uF	10%	6.3V
C818	1-125-777-11	CERAMIC CHIP	0.1uF	10.00%	10V
C819	1-125-777-11	CERAMIC CHIP	0.1uF	10.00%	10V
C820	1-164-943-11	CERAMIC CHIP	0.01uF	10.00%	16V
C821	1-107-819-11	CERAMIC CHIP	0.022uF	10.00%	16V
C822	1-164-943-11	CERAMIC CHIP	0.01uF	10.00%	16V
C823	1-107-819-11	CERAMIC CHIP	0.022uF	10.00%	16V
C826	1-164-943-11	CERAMIC CHIP	0.01uF	10.00%	16V
C829	1-125-777-11	CERAMIC CHIP	0.1uF	10.00%	10V
C830	1-126-209-11	ELECT CHIP	100uF	20.00%	4V
* C831	1-107-820-11	CERAMIC CHIP	0.1uF		16V
C832	1-126-209-11	ELECT CHIP	100uF	20.00%	4V
C833	1-124-778-00	ELECT CHIP	22uF	20%	6.3V
C835	1-119-923-11	CERAMIC CHIP	0.047uF	10.00%	10V
C837	1-164-840-11	CERAMIC CHIP	1PF	0.25PF	50V
C838	1-164-840-11	CERAMIC CHIP	1PF	0.25PF	50V
C841	1-164-937-11	CERAMIC CHIP	0.001uF	10.00%	50V
* C851	1-107-820-11	CERAMIC CHIP	0.1uF		16V
C852	1-125-777-11	CERAMIC CHIP	0.1uF	10.00%	10V
C853	1-164-943-11	CERAMIC CHIP	0.01uF	10.00%	16V
C855	1-164-943-11	CERAMIC CHIP	0.01uF	10.00%	16V
C856	1-164-943-11	CERAMIC CHIP	0.01uF	10.00%	16V
C871	1-107-826-11	CERAMIC CHIP	0.1uF	10.00%	16V
C880	1-164-943-11	CERAMIC CHIP	0.01uF	10.00%	16V
C901	1-164-937-11	CERAMIC CHIP	0.001uF	10.00%	50V
C905	1-164-943-11	CERAMIC CHIP	0.01uF	10.00%	16V
C906	1-164-937-11	CERAMIC CHIP	0.001uF	10.00%	50V
C907	1-125-889-91	CERAMIC CHIP	2.2uF	10%	10V
C911	1-164-943-11	CERAMIC CHIP	0.01uF	10.00%	16V
C912	1-164-943-11	CERAMIC CHIP	0.01uF	10.00%	16V
C913	1-164-943-11	CERAMIC CHIP	0.01uF	10.00%	16V
C914	1-164-937-11	CERAMIC CHIP	0.001uF	10.00%	50V
C916	1-165-851-91	TANTAL. CHIP	10uF	20%	6.3V
* C918	1-107-820-11	CERAMIC CHIP	0.1uF		16V
C920	1-128-964-91	TANTAL. CHIP	100uF	20%	6.3V
C922	1-125-777-11	CERAMIC CHIP	0.1uF	10.00%	10V
C924	1-128-964-91	TANTAL. CHIP	100uF	20%	6.3V
C925	1-164-941-11	CERAMIC CHIP	0.0047uF	10.00%	16V
* C926	1-107-820-11	CERAMIC CHIP	0.1uF		16V
C928	1-164-939-11	CERAMIC CHIP	0.0022uF	10.00%	50V
C929	1-164-943-11	CERAMIC CHIP	0.01uF	10.00%	16V
C930	1-164-939-11	CERAMIC CHIP	0.0022uF	10.00%	50V
C931	1-164-939-11	CERAMIC CHIP	0.0022uF	10.00%	50V
C932	1-125-838-11	CERAMIC CHIP	2.2uF	10%	6.3V
C933	1-164-943-11	CERAMIC CHIP	0.01uF	10.00%	16V
* C957	1-107-820-11	CERAMIC CHIP	0.1uF		16V
C967	1-126-246-11	ELECT CHIP	220uF	20%	4V
C968	1-126-246-11	ELECT CHIP	220uF	20%	4V
C971	1-126-246-11	ELECT CHIP	220uF	20%	4V
C973	1-124-778-00	ELECT CHIP	22uF	20%	6.3V
C975	1-124-778-00	ELECT CHIP	22uF	20%	6.3V
C976	1-125-837-91	CERAMIC CHIP	1uF	10%	6.3V

Ref. No.	Part No.	Description			Remarks
C984	1-164-937-11	CERAMIC CHIP	0.001uF	10.00%	50V
C985	1-125-777-11	CERAMIC CHIP	0.1uF	10.00%	10V
		< CONNECTOR >			
CN501	1-573-360-21	CONNECTOR, FFC/FPC 20P			
CN651	1-816-947-21	CONNECTOR (SQUARE TYPE)(USB)5P ( )			
CN701	1-573-350-11	CONNECTOR, FFC/FPC 10P			
CN872	1-573-354-11	CONNECTOR, FFC/FPC 14P			
		< DIODE >			
D171	8-719-056-72	DIODE 02DZ2.4-Z(TPH3)			
D271	8-719-056-72	DIODE 02DZ2.4-Z(TPH3)			
D371	8-719-056-72	DIODE 02DZ2.4-Z(TPH3)			
D605	6-500-483-01	DIODE MA22D2800LS0			
D606	8-719-081-35	DIODE MA2YD1700LS0			
D607	8-719-081-35	DIODE MA2YD1700LS0			
D652	8-719-081-73	DIODE DF3A6.8FE(TPL3)			
D653	6-500-483-01	DIODE MA22D2800LS0			
D654	8-719-421-27	DIODE MA728-TX			
D851	8-719-421-27	DIODE MA728-TX			
D901	8-719-420-51	DIODE MA729-TX			
D902	6-500-483-01	DIODE MA22D2800LS0			
D903	6-500-483-01	DIODE MA22D2800LS0			
		< FERRITE BEAD >			
FB651	1-216-864-11	METAL CHIP	0	5%	1/16W
FB652	1-216-864-11	METAL CHIP	0	5%	1/16W
FB801	1-216-864-11	METAL CHIP	0	5%	1/16W
FB802	1-216-864-11	METAL CHIP	0	5%	1/16W
FB803	1-216-864-11	METAL CHIP	0	5%	1/16W
FB805	1-216-864-11	METAL CHIP	0	5%	1/16W
FB806	1-216-864-11	METAL CHIP	0	5%	1/16W
		< IC >			
IC371	6-704-740-01	IC NJM2776RB2A(TE2)			
@ IC501	6-703-946-01	IC SN761058AZQLR			
IC601	6-705-148-01	IC SC111292EPR2			
IC651	8-759-569-80	IC XC6367A331MR			
IC701	6-705-146-01	IC SC111290EPR2			
@ IC801	8-753-001-00	IC CXD2680-207GA			
☆ IC852	————————	IC AK6417AL-L			
IC901	6-705-147-01	IC SC111291EPR2			
		< JACK >			
J304	1-794-084-31	JACK (🎧)			
		< COIL >			
L503	1-414-398-11	INDUCTOR	10uH		
L504	1-414-398-11	INDUCTOR	10uH		
L603	1-414-398-11	INDUCTOR	10uH		
L604	1-424-979-21	INDUCTOR	10uH		
L651	1-416-669-11	INDUCTOR	22uH		
L802	1-414-398-11	INDUCTOR	10uH		
L803	1-414-398-11	INDUCTOR	10uH		
L901	1-456-219-21	INDUCTOR	220uH		
L902	1-419-881-11	INDUCTOR	47uH		
L903	1-414-398-11	INDUCTOR	10uH		

@ Replacement of IC501 and IC801 used in this set requires a special tool.

☆When IC852 is damaged, replace the MAIN board.

Downloaded from www.Manualslib.com manuals search engine

MAIN

Ref. No.	Part No.	Description				Remarks
L904	1-416-669-11	INDUCTOR	22uH			
		< LINE FILTER >				
LF952	1-416-405-21	FERRITE	0uH			
		< TRANSISTOR >				
Q501	8-729-922-10	TRANSISTOR	2SA1577-T106-QR			
Q603	8-729-053-71	TRANSISTOR	TS8K1TB			
Q604	6-550-356-01	TRANSISTOR	MCH6616-TL-E			
Q605	6-550-357-01	TRANSISTOR	CPH5614-TL-E			
Q651	8-729-047-48	TRANSISTOR	UMD12N-TR			
Q652	8-729-053-03	TRANSISTOR	XP151A12A2MR			
Q653	8-729-041-51	TRANSISTOR	FMMT617TA			
Q654	8-729-037-63	TRANSISTOR	UN9115J-(TX).SO			
Q672	8-729-037-71	TRANSISTOR	UN9210J-(TX).SO			
Q871	8-729-429-44	TRANSISTOR	XP1501-TXE			
		< RESISTOR >				
R171	1-218-965-11	RES-CHIP	10K	5%	1/16W	
R172	1-218-973-11	RES-CHIP	47K	5%	1/16W	(US)
R173	1-218-961-11	RES-CHIP	4.7K	5%	1/16W	(EXCEPT US)
R173	1-218-965-11	RES-CHIP	10K	5%	1/16W	(US)
R174	1-218-965-11	RES-CHIP	10K	5%	1/16W	(US)
R174	1-218-977-11	RES-CHIP	100K	5%	1/16W	(EXCEPT US)
R175	1-208-635-11	RES-CHIP	10	5%	1/16W	
R271	1-218-965-11	RES-CHIP	10K	5%	1/16W	
R272	1-218-973-11	RES-CHIP	47K	5%	1/16W	(US)
R273	1-218-961-11	RES-CHIP	4.7K	5%	1/16W	(EXCEPT US)
R273	1-218-965-11	RES-CHIP	10K	5%	1/16W	(US)
R274	1-218-965-11	RES-CHIP	10K	5%	1/16W	(US)
R274	1-218-977-11	RES-CHIP	100K	5%	1/16W	(EXCEPT US)
R275	1-208-635-11	RES-CHIP	10	5%	1/16W	
R312	1-218-989-11	RES-CHIP	1M	5%	1/16W	
R361	1-218-941-81	RES-CHIP	100	5%	1/16W	
R501	1-218-977-11	RES-CHIP	100K	5%	1/16W	
R502	1-218-446-11	METAL CHIP	1	5%	1/10W	
R503	1-218-446-11	METAL CHIP	1	5%	1/10W	
R504	1-218-965-11	RES-CHIP	10K	5%	1/16W	
R505	1-218-965-11	RES-CHIP	10K	5%	1/16W	
R507	1-208-707-11	METAL CHIP	10K	0.5%	1/16W	
R508	1-208-683-11	METAL CHIP	1K	0.5%	1/16W	
R509	1-218-990-11	SHORT CHIP	0			
R511	1-218-990-11	SHORT CHIP	0			
R609	1-218-965-11	RES-CHIP	10K	5%	1/16W	
R612	1-216-789-11	METAL CHIP	2.2	5%	1/16W	
R613	1-216-789-11	METAL CHIP	2.2	5%	1/16W	
R614	1-218-985-11	RES-CHIP	470K	5%	1/16W	
R616	1-218-957-11	RES-CHIP	2.2K	5%	1/16W	
R617	1-218-965-11	RES-CHIP	10K	5%	1/16W	
R619	1-218-969-11	RES-CHIP	22K	5%	1/16W	

Ref. No.	Part No.	Description			Remarks
R654	1-218-990-11	SHORT CHIP	0		
R655	1-218-953-11	RES-CHIP	1K	5%	1/16W
R656	1-218-985-11	RES-CHIP	470K	5%	1/16W
R657	1-218-990-11	SHORT CHIP	0		
R658	1-218-961-11	RES-CHIP	4.7K	5%	1/16W
R659	1-218-957-11	RES-CHIP	2.2K	5%	1/16W
R660	1-218-941-81	RES-CHIP	100	5%	1/16W
R661	1-218-973-11	RES-CHIP	47K	5%	1/16W
R662	1-216-864-11	METAL CHIP	0	5%	1/16W
R671	1-220-804-11	RES-CHIP	2.2M	5%	1/16W
R672	1-218-977-11	RES-CHIP	100K	5%	1/16W
R674	1-216-864-11	METAL CHIP	0	5%	1/16W
R701	1-218-957-11	RES-CHIP	2.2K	5%	1/16W
R702	1-218-957-11	RES-CHIP	2.2K	5%	1/16W
R703	1-218-957-11	RES-CHIP	2.2K	5%	1/16W
R704	1-218-965-11	RES-CHIP	10K	5%	1/16W
R705	1-218-965-11	RES-CHIP	10K	5%	1/16W
R706	1-218-965-11	RES-CHIP	10K	5%	1/16W
R803	1-208-635-11	RES-CHIP	10	5%	1/16W
R804	1-208-635-11	RES-CHIP	10	5%	1/16W
R805	1-218-990-11	SHORT CHIP	0		
R806	1-218-990-11	SHORT CHIP	0		
R807	1-218-965-11	RES-CHIP	10K	5%	1/16W
R808	1-218-965-11	RES-CHIP	10K	5%	1/16W
R809	1-218-977-11	RES-CHIP	100K	5%	1/16W
R811	1-218-981-11	RES-CHIP	220K	5%	1/16W
R813	1-218-953-11	RES-CHIP	1K	5%	1/16W
R814	1-218-957-11	RES-CHIP	2.2K	5%	1/16W
R815	1-218-953-11	RES-CHIP	1K	5%	1/16W
R816	1-218-945-11	RES-CHIP	220	5%	1/16W
R817	1-220-804-11	RES-CHIP	2.2M	5%	1/16W
R818	1-218-989-11	RES-CHIP	1M	5%	1/16W
R819	1-208-691-11	METAL CHIP	2.2K	0.5%	1/16W
R820	1-208-691-11	METAL CHIP	2.2K	0.5%	1/16W
R821	1-218-973-11	RES-CHIP	47K	5%	1/16W
R822	1-218-981-11	RES-CHIP	220K	5%	1/16W
R823	1-218-933-11	RES-CHIP	22	5%	1/16W
R824	1-218-985-11	RES-CHIP	470K	5%	1/16W
R825	1-218-989-11	RES-CHIP	1M	5%	1/16W
R826	1-218-957-11	RES-CHIP	2.2K	5%	1/16W
R827	1-218-961-11	RES-CHIP	4.7K	5%	1/16W
R828	1-218-933-11	RES-CHIP	22	5%	1/16W
R829	1-218-933-11	RES-CHIP	22	5%	1/16W
R832	1-218-990-11	SHORT CHIP	0		
R835	1-208-699-11	METAL CHIP	4.7K	0.5%	1/16W
R837	1-218-973-11	RES-CHIP	47K	5%	1/16W
R839	1-218-990-11	SHORT CHIP	0		
R841	1-218-990-11	SHORT CHIP	0		
R842	1-218-990-11	SHORT CHIP	0		
R844	1-218-990-11	SHORT CHIP	0		
R845	1-218-977-11	RES-CHIP	100K	5%	1/16W
R846	1-218-977-11	RES-CHIP	100K	5%	1/16W
R847	1-218-981-11	RES-CHIP	220K	5%	1/16W
R849	1-218-990-11	SHORT CHIP	0		
R850	1-218-990-11	SHORT CHIP	0		
R851	1-218-990-11	SHORT CHIP	0		
R855	1-218-990-11	SHORT CHIP	0		
R857	1-218-989-11	RES-CHIP	1M	5%	1/16W

Downloaded from www.Manualslib.com manuals search engine

Ref. No.	Part No.	Description			Remarks
R858	1-218-990-11	SHORT CHIP	0		
R860	1-216-864-11	METAL CHIP	0	5%	1/16W
R861	1-218-990-11	SHORT CHIP	0		
R862	1-218-989-11	RES-CHIP	1M	5%	1/16W
R863	1-218-990-11	SHORT CHIP	0		
R871	1-218-957-11	RES-CHIP	2.2K	5%	1/16W
R872	1-218-953-11	RES-CHIP	1K	5%	1/16W
R873	1-218-985-11	RES-CHIP	470K	5%	1/16W
R874	1-218-985-11	RES-CHIP	470K	5%	1/16W
R901	1-218-989-11	RES-CHIP	1M	5%	1/16W
R902	1-218-989-11	RES-CHIP	1M	5%	1/16W
R903	1-218-957-11	RES-CHIP	2.2K	5%	1/16W
R904	1-218-957-11	RES-CHIP	2.2K	5%	1/16W
R905	1-208-707-11	METAL CHIP	10K	0.5%	1/16W
R907	1-218-985-11	RES-CHIP	470K	5%	1/16W
R908	1-218-969-11	RES-CHIP	22K	5%	1/16W
R912	1-218-977-11	RES-CHIP	100K	5%	1/16W
R914	1-218-973-11	RES-CHIP	47K	5%	1/16W
R915	1-218-981-11	RES-CHIP	220K	5%	1/16W
R917	1-218-985-11	RES-CHIP	470K	5%	1/16W
R918	1-218-985-11	RES-CHIP	470K	5%	1/16W
R919	1-218-973-11	RES-CHIP	47K	5%	1/16W
R923	1-218-977-11	RES-CHIP	100K	5%	1/16W
R926	1-218-969-11	RES-CHIP	22K	5%	1/16W
		< SWITCH >			
S801	1-762-946-12	SWITCH, PUSH (1 KEY)			
S803	1-762-805-21	SWITCH, PUSH (1 KEY)			
S806	1-786-437-11	SWITCH, PUSH (2 KEY)			
S807	1-762-078-11	SWITCH, SLIDE (HOLD ▬)			
		< VIBRATOR >			
X802	1-795-727-21	VIBRATOR, CERAMIC 48MHz			
X803	1-795-778-11	VIBRATOR, CRYSTAL 22.5792MHz			

****

MISCELLANEOUS
****

6	1-804-834-11	LCD MODULE
⚠309	X-3382-953-1	SERVICE ASSY, OP (LCX-5R)
M601	8-835-744-21	MOTOR, DC SSM18B/C-NP (SPINDLE)
M602	1-763-727-11	MOTOR, DC (SLED) (WITH GEAR) (SLED)
M603	1-763-400-21	MOTOR, DC (OVER WRITE HEAD UP/DOWN)

ACCESSORIES
****

1-823-519-31	CORD, CONNECTION (DEDICATED USB CABLE)
3-263-411-11	MANUAL INSTRUCTION (ENGLISH)
3-263-411-21	MANUAL INSTRUCTION (FRENCH) (CND)
3-263-411-31	MANUAL INSTRUCTION (SPANISH) (MX)
8-954-007-93	RECEVER, EAR (MDR-027LP) (US)
8-954-008-92	RECEIVER, EAR MDR-E808LP (EXCEPT US)
X-3383-456-1	CD-ROM (APPLICATION) ASSY (SonicStage and MD Simple Burner) (MX)
X-3384-032-1	CD-ROM (APPLICATION) ASSY (SonicStage and MD Simple Burner) (US)
X-3384-135-1	CD-ROM (APPLICATION) ASSY (SonicStage and MD Simple Burner) (CND)

The components identified by mark ⚠ or dotted line with mark ⚠ are critical for safety. Replace only with part number specified.	Les composants identifiés par une marque ⚠ sont critiques pour la sécurité. Ne les remplacer que par une pièce portant le numéro spécifié.

Downloaded from www.Manualslib.com manuals search engine

REVISION HISTORY

Clicking the version allows you to jump to the revised page.
Also, clicking the version at the upper right on the revised page allows you to jump to the next revised page.

Ver.	Date	Description of Revision
1.0	2004.04	New

Downloaded from www.Manualslib.com manuals search engine